HAL
open science

# Assessing Fuel Consumption Reduction of Revercycle a Reversible Mobile Air Conditioning/ Organic Rankine Cycle System

Luca Di Cairano, Wissam Bou-Nader, Florent Breque, Maroun Nemer

## To cite this version:

Luca Di Cairano, Wissam Bou-Nader, Florent Breque, Maroun Nemer. Assessing Fuel Consumption Reduction of Revercycle a Reversible Mobile Air Conditioning/ Organic Rankine Cycle System. 5th International Seminar on ORC Power Systems, Sep 2019, Athènes, Greece. hal-02389198

**HAL Id: hal-02389198**

**https://minesparis-psl.hal.science/hal-02389198v1**

Submitted on 2 Dec 2019

**HAL** is a multi-disciplinary open access archive for the deposit and dissemination of scientific research documents, whether they are published or not. The documents may come from teaching and research institutions in France or abroad, or from public or private research centers.

L'archive ouverte pluridisciplinaire **HAL**, est destinée au dépôt et à la diffusion de documents scientifiques de niveau recherche, publiés ou non, émanant des établissements d'enseignement et de recherche français ou étrangers, des laboratoires publics ou privés.

# ASSESSING FUEL CONSUMPTION REDUCTION OF REVERCYCLE A REVERSIBLE MOBILE AIR CONDITIONING/ ORGANIC RANKINE CYCLE SYSTEM

L. Di Cairano[1], W. Bou Nader[2], F. Breque[3], M. Nemer[4]*

[1]MINES ParisTech, PSL Research University, Center for energy Efficiency of Systems
Palaiseau, France
luca.di_cairano@mines-paristech.fr

[2]PSA Group, Centre Technique de Vélizy,
Vélizy, France
wissam.bounader@mpsa.com

[3]MINES ParisTech, PSL Research University, Center for energy Efficiency of Systems
Palaiseau, France
florent.breque@mines-paristech.fr

[4]MINES ParisTech, PSL Research University, Center for energy Efficiency of Systems
Palaiseau, France
maroun.nemer@mines-paristech.fr

* Corresponding Author

## ABSTRACT

Regulators are imposing a reduction of fleet fuel consumption to car manufacturers due to the global warming. Among the different technologies able to improve vehicle efficiency Organic Rankine Cycle (ORC) is a promising solution. ORC systems are studied from more than 40 years, but their commercial success is hindered by the compactness and cost requirements of the automotive sector. In the attempt to overcome these limits a reversible Mobile Air Conditioning (MAC)/ORC, called hereafter ReverCycle, is developed by the CES in collaboration with PSA Group. ReverCycle is a compact system able to operate in two different modes: a standard mobile air conditioning system, when a cabin cooling need is required, or an ORC recovering mechanical energy from the waste heat of an engine cooling system.

This paper presents a simulation methodology to assess ReverCycle fuel consumption gain. A system approach is developed with a global light duty vehicle model. The global model allows estimating the yearly working hours for each of the ReverCycle operating modes and to quantify the recovered mechanical energy in ORC mode. By coupling the two results it is possible to provide the fuel consumption reduction for a given climatic region. In order to be as close as possible to real driving conditions the calculation of the waste heat recovery potential is based on a WLTP cycle at different ambient temperatures.

In a temperate zone the MAC activation is limited to 21% of trip occurrences. ReverCycle average fuel consumption reduction is 1.3% with cold start conditions and 2 % with hot start conditions. The reversible MAC/ORC system loses 25% of the ORC waste heat recovery potential due to MAC activation time, but there is an advantage of a significant cost and compactness reduction.

# 1. INTRODUCTION

The transport sector has a strong impact on $CO_2$ emissions consequently regulators are imposing strict limits for fuel consumption and emissions to car manufactures. Many technical solutions are under study in order to meet regulators requirements, among them waste heat recovery has a great attention. In a passenger car almost 60% of the fuel chemical energy is lost to the environment as waste heat. The two available heat sources in a vehicle are the engine coolant and the exhaust gases. The first has the advantage to have a stable temperature with a mean close to 100°C, while the second is a higher quality energy source with a temperature that could reach 900°C (El Chammas and Clodic, 2005).
The most promising technologies identified in literature are Rankine cycle, Organic Rankine cycle, thermoelectric generators and turbocompounding. The main difference between a Rankine cycle (RC) and an Organic Rankine cycle (ORC) is the working fluid. In the ORC an organic fluid is used instead of water in order to obtain higher efficiencies with low temperature sources.
The integration of RC and ORC in passenger cars is a difficult task since the additional weight introduced by its components and its interaction with the other vehicle systems is causing a negative effect on performances (Horst *et al*., 2014). BMW researchers judged more interesting to simplify the complexity and to reduce the weight of their RC system rather than maximizing the power output (Freymann *et al.*, 2008).
Recently an interest is growing on the engine coolant as heat source, since it is possible to develop a lightweight, compact and low cost solution (Leduc *et al.*, 2017). A low level heat source has also the advantage to be compatible with the exploitation of automotive scroll compressors as expanders in the ORC cycle. This feature opens the possibility to develop a reversible system as (Dumont *et al.*, 2015). The CES in collaboration with PSA Group has investigated a reversible MAC/ORC system called ReverCylcle. The primary goal of this study is to assess fuel economy of this innovative system. A second goal is to estimate the waste recovery potential lost due to the MAC activation time. A reversible system implies that the ORC function is not available when MAC is turned on.

# 2. SYSTEM OUTLINE AND DESIGN

## 2.1 Operating Mode

The system architecture is shown in Figure 1. The selected working fluid for this study and for the proof of concept is initially refrigerant R134a. The final working fluid choice will be its substitute R1234yf. Two components are mutualized: the scroll machine and the MAC/ORC condenser. The scroll machine is mechanically coupled to the engine shaft. The machine can operate as compressor in MAC mode and as expander in ORC mode. The operating mode is switched by activation and deactivation of two automatic valves.

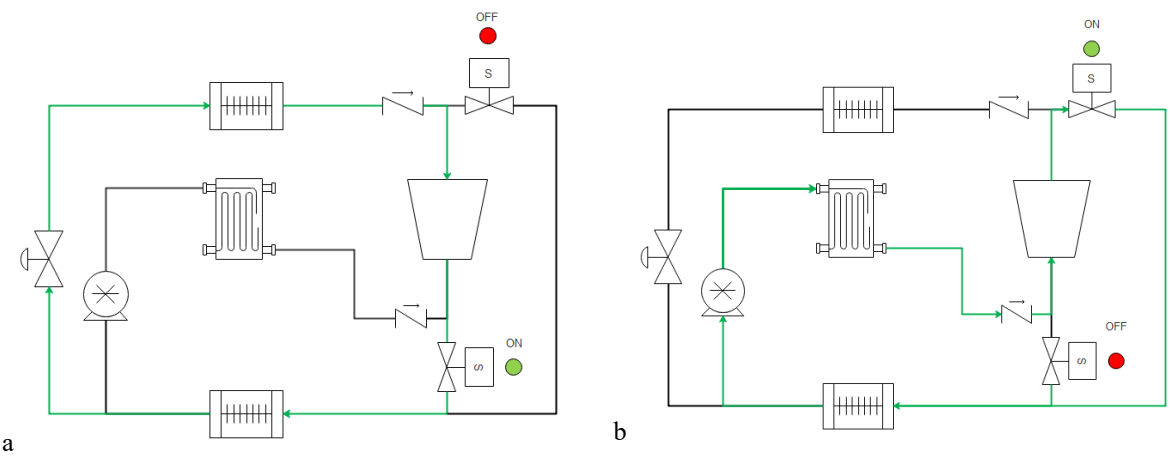


**Figure 1:** ReverCycle in MAC mode (a) and ORC mode (b)

### 2.2 Sizing

ReverCycle must reply to cabin cooling needs of a medium size vehicle.
The nominal point for the air conditioning mode is defined as follows:

- The ambient temperature is set to 45°C.
- The required cooling power is 6 kW.
- The condenser saturation pressure is set to 19.8 bar (abs) and the evaporator pressure to 4 bar (abs) according to standard operating values.
- The nominal condenser subcooling and evaporator superheating are set to 1K and 5K respectively.

The cycle thermodynamic points and compressor volumetric flow rate are calculated via a VBA code. The model is based on simple energy balances. The heat exchangers geometry is calculated with the Air Conditioning library (Eborn *et al.*, 2005) and model boundary conditions are provided by the VBA model. The condenser and evaporator are modeled as micro-channel heat exchangers.

The design point for the ORC mode is the highway operation at 120 km/h. The chosen heat source is the engine coolant. The available heat flow rate is 13.4 kW, the coolant temperature is 105°C with a mass flow rate of 0.8 kg/s. The ambient temperature is set to 20°C. The thermodynamic cycle is defined as follows:

- The boiler saturation pressure is set to 30 bar and the condenser pressure is set to 10 bar.
- The nominal condenser subcooling and boiler superheating are set to 1K and 10K respectively.

The cycle thermodynamic points, the turbine volumetric flow rate and the geometry of the heat exchangers are calculated as in the air conditioning mode coupling a VBA code with the Air Conditioning library. The condenser is modeled as a micro-channel heat exchanger and the boiler as a brazed plate heat exchanger.

Two components are mutualized: the scroll machine and the MAC/ORC condenser. The scroll machine is chosen among the available automotive scroll compressors. The compressor SANDEN TRSA05 is the selected reversible machine. The MAC condenser and the ORC condenser are 4 pass micro-channel heat exchangers with louvered fins. The number of fins is 64 each 10 cm. The MAC condenser is 50 cm x 45 cm x 1.6 cm, while the ORC condenser is 62 cm x 45 cm x 2.2 cm.

The ORC condenser is larger and deeper compared to the MAC one, but its dimensions are still in automotive standards. The ORC condenser geometry is selected as the ReverCycle condenser geometry.
The net recovered mechanical power in ORC mode is 0.98 kW.

## 3. DYNAMIC MODEL

(Heidrich and Krisch, 2014) underlined that evaluating the fuel economy of an ORC on the design point is only half the truth. In real life operation the ORC system will experience transient operation conditions. Waste heat recovery fuel economy has then to be assessed on a test cycle like the WLTC. In addition to that (Horst *et al*, 2014) showed the importance of assessing the negative impact of the interaction between the ORC system and the other vehicle systems.
A global vehicle model is needed to estimate ReverCycle fuel economy on a WLTC cycle and to study its interaction with the engine cooling circuit. The vehicle model is developed within the Dymola environment. The model is composed of three different modules, which will be described in the following paragraphs.

### 3.1 Powertrain and engine thermal model

The powertrain model is based on the work of (Mansour and Clodic, 2012). The model, originally developed for a hybrid vehicle, is adapted to a conventional spark ignited engine vehicle. It allows predicting vehicle fuel consumption on a driving cycle imposed by the user. Engine and accessories consumptions are table based.

The engine thermal model is based on the PowerTrain library (Schweiger *et al.*, 2005), where the engine power loss is based on an empirical correlation function of engine speed $w$:

$$Power\ Loss = (Chem.energy - Mech.energy)(aw^2 + bw + c) \quad (1)$$

The calculated heat flow is then directed to a thermal network that identifies the heat flow rejected to the coolant and received by the engine block circuit capacitance.

### 3.2 Engine cooling circuit model

Engine cooling system allows the engine to work at optimal conditions. It consists of a closed hydraulic circuit fed by a centrifugal pump coupled to the engine speed via a pulley-belt system. The basic architecture is composed of five main components: the pump, the engine block, the thermostat, the radiator and the cabin heater. The cooling medium is a water/glycol mixture. The waste heat from the engine block is released by the radiator, but during engine warm up a radiator by-pass circuit is present in order to speed up the temperature rise. In the traditional configuration by-pass control is managed by a wax thermostat.

The cabin heater is a smaller radiator which is used for cabin heating, this is a simple waste heat recovery application which allows providing passenger thermal comfort exploiting the engine coolant losses. In order to simplify the model its presence is modeled as a table based thermal power loss in the engine block capacitance.

The dynamics of the engine cooling systems are controlled by the higher inertia components: the engine block and the radiator. Feed pump and thermostat dynamics are fast and their model can be of steady state type. Experimental data provided by PSA Group suggest a linear relationship between feed pump flow rate and engine speed.

The wax thermostat is modeled as a three-way valve, where the opening and closure behavior is taking into account the temperature hysteresis. The radiator is modeled with a lumped parameter approach where the coolant, air and wall capacitances are considered. The coolant circuit inside the engine block is modeled as a capacitance receiving heat from the engine thermal model.

The dynamic model is then validated on experimental results provided by PSA Group on a 1000 s dynamic driving cycle. The comparison of coolant temperatures between experimental results and simulation is shown in Figure 2.

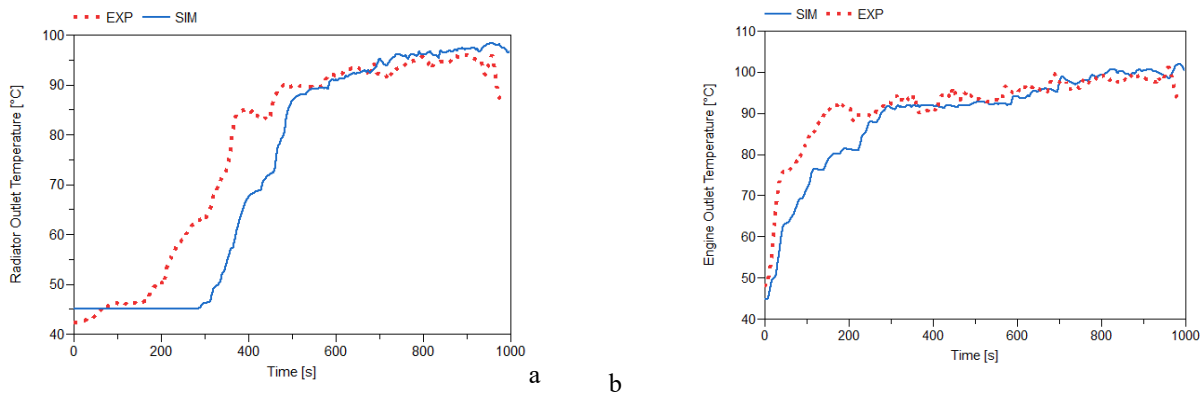


**Figure 2:** Dynamic model validation: (a) Radiator outlet temperature (b) Engine outlet temperature

### 3.3 ORC model

The ReverCycle ORC mode is modeled with the ThermoCycle library (Quoilin *et al*, 2014). The working fluid properties are calculated via the Coolprop library (Bell *et al.*, 2014). Heat exchangers are simulated as finite volumes counter current heat exchangers.

Heat transfer area and nominal heat transfer coefficients are retrieved from the sizing phase results.

The volumetric pump has a 1.5 cc displacement. The expander is modeled with the semi-empirical approach proposed by (Lemort *et al.*, 2009) and calibrated on internally available experimental results.

## 4 RESULTS

The two main objectives are the calculation of ReverCycle fuel economy in ORC mode and the evaluation of the WHR potential which is lost due to the MAC activation time. The first step is to estimate on a yearly basis the MAC activation occurrences.

### 4.1 MAC activation time

The procedure used to estimate the MAC activation time is similar to the one developed by (Johnson, 2002). The main difference is in the calculation of the soak temperature. In this paper the mono-zone cabin thermal model developed by (Benouali, 2002) is used instead of an empirical correlation. The first step of the procedure consists in selecting a climatic region and the corresponding weather data from a database (Crawley *et al*, 2000). The weather data are selected exclusively during the 7am-8pm interval, the time step is one hour. For each time step the cabin soak temperature is calculated with the cabin thermal model. This information is the main input for the thermal comfort model developed by (Fanger, 1982), which is calculating the percentage of people that will turn on the MAC system due to thermal comfort dissatisfaction.

**Table 1:** MAC activation time for various climatic conditions

| City | MAC activation time |
|---|---|
| Paris | 21% |
| Moscow | 16% |
| Valencia | 41% |
| Brasilia | 59% |

The MAC activation time for different cities is shown in Table 1. Each city represents a specific climatic region. Paris represents an oceanic climate in the Köppen climate classification, Valencia a Mediterranean climate, Brasilia a tropical climate and Moscow a humid continental climate.

### 4.2 Optimal speed ratios in ORC mode

ReverCycle has a simple mechanical architecture, where the ORC pump and expander speeds depend on engine shaft speed. This mechanical system has then two parameters to optimize: the speed ratio between the pump and the engine and the speed ratio between the expander and the engine.
The reference speed ratios are the one calculated at the design point. A positive and negative variation of 40% is applied to each one of the speed ratios giving a nine points test matrix, see Table 2.
A WLTC cycle is run for each one of the nine points and the average ORC cycle efficiency is evaluated. Where cycle efficiency is defined by:

$$\eta_{cycle} = \frac{W_{net}}{\dot{Q}_{hot\ source}} \tag{2}$$

The ambient temperature is set to 20°C and the engine cooling circuit initial temperature to 85°C.
Table 4 is clearly identifying the reference condition as the optimal solution, but the result is not taking into account the effect of expander inlet vapor quality.
The expander simulation model is not considering the negative effect of liquid droplets inside the expander. Scroll expander can tolerate liquid droplets, but looking at Figure 3 it is clear that most of the speed ratios are implying a permanent two phase expansion with a low vapor quality.

The only acceptable solutions are the ones which involve a speed ratio of 0.6 between the pump and the engine. A speed ratio of 0.24 between the expander and the engine is judged too low for a correct operation of the machine.
The final choice is then a speed ratio of 0.6 between the pump and the engine and a speed ratio of 0.4 between the expander and the engine.

**Table 2:** ORC average cycle efficiency as a function of speed ratios

| | **Pump/Engine 0.6** | **Pump/Engine 1** | **Pump/Engine 1.4** |
|---|---|---|---|
| **Expander/Engine 0.24** | 4.2 % | 4.8 % | 4.1 % |
| **Expander/Engine 0.4** | 2.5% | 5 % | 4.8 % |
| **Expander/Engine 0.56** | 2 % | 3.9 % | 4.2% |

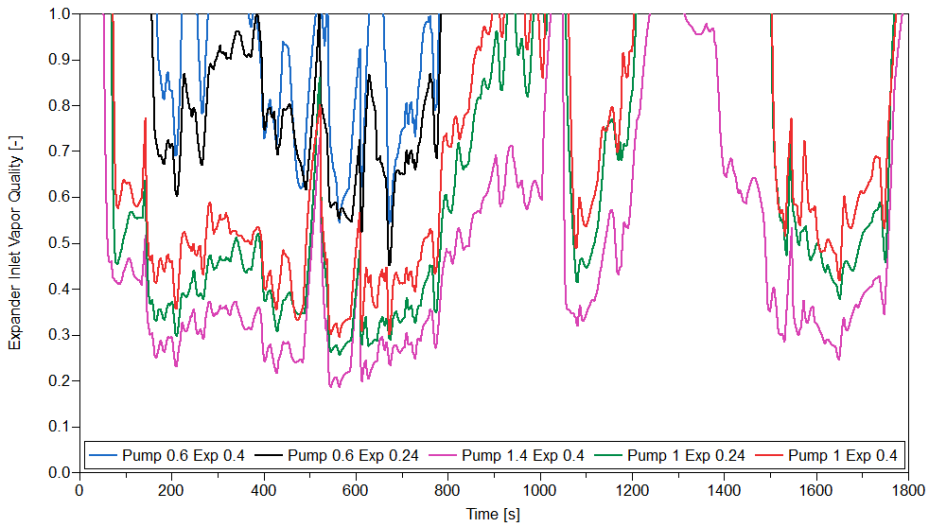


**Figure 3:** Working fluid vapour quality at expander inlet for different speed ratios

### 4.3 ReverCycle fuel economy in ORC mode

The MAC activation time calculation has provided important information on the ORC mode availability. The next questions involve ReverCycle fuel economy and WHR potential lost due to the absence of a full ORC mode availability. The global vehicle model is then used to provide the answer.
The reference simulation is a WLTC cycle. The parameters are the engine cooling circuit initial temperature and the ambient temperature. The engine cooling circuit temperature can be initialized at ambient temperature (cold start) or at 85°C (hot start). The considered ambient temperature range is 0°C to 30°C. It is supposed that below 0°C the totality of the engine coolant waste heat is necessary for cabin heating. Above 30°C MAC is always turned on. The temperature range is then divided in six 5 K temperature ranges and six average temperatures are defined. A WLTC cycle is run for each of the six average temperatures with a cold start and a hot start initialization. The net recovered mechanical power is evaluated thanks to the ORC model, see Figure 4. The net recovered mechanical power allows identifying the net torque added to the engine by the expander belt.
The new engine torque is recalculated and the fuel economy is estimated via the engine map.
Each simulation is weighted for its yearly occurrence in order to calculate the WHR potential over one year. ReverCycle fuel economy is calculated in the same way, but each temperature range simulation is additionally multiplied by the ORC availability. The final results are presented in Figure 5 and Table 3.

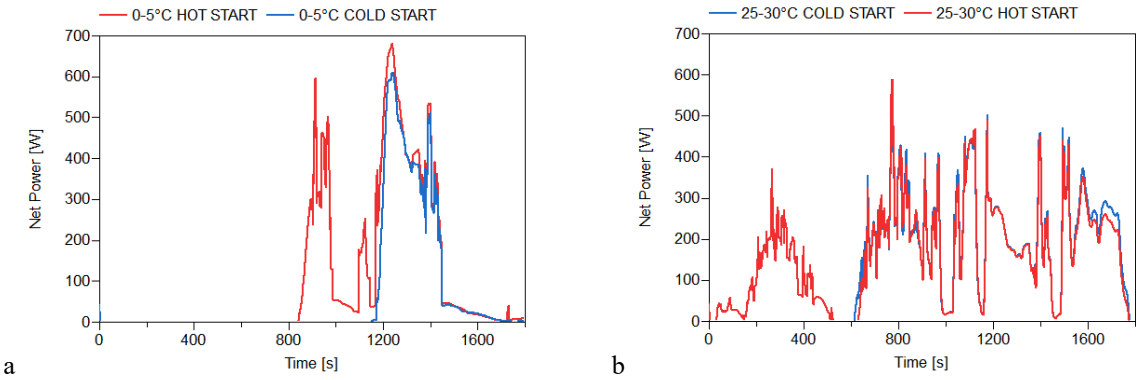


**Figure 4:** ReverCycle net power production for 0-5°C ambient temperature range (a) and 25-30°C (b)

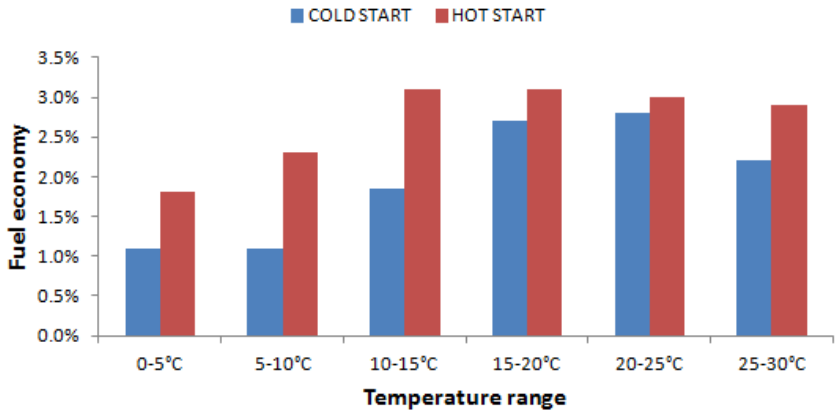


**Figure 5:** ReverCycle fuel economy for different ambient temperature ranges

**Table 3:** ReverCycle fuel economy for different climatic conditions

| City | HOT START Fuel economy | COLD START Fuel economy |
|---|---|---|
| Paris | 2% | 1.3% |
| Moscow | 1.65% | 1.05% |
| Valencia | 1.68% | 1.22% |
| Brasilia | 1.13% | 1% |

Paris offers the best climatic conditions to ReverCycle, which shows the highest fuel economy.
In Paris and Moscow the reversible MAC/ORC system loses 25% of the ORC waste heat recovery potential due to MAC activation time. In Valencia and Brasilia this loss amounts respectively to 43% and 58% of the ORC waste heat recovery potential due to the higher MAC activation time.

## 5 CONCLUSIONS

This simulation study is the first stage of ReverCycle development process. It allows quantifying the fuel economy of this reversible system which is, in Paris, between 1.3% and 2%. A consistent cost and compacity reduction is obtained due to the mutualization of two of the four ORC cycle components with the vehicle MAC system. The WHR potential is 25% lower than a standard ORC system due to unavailability of the ORC mode while ReverCycle is in MAC mode.

The perspectives are the following:

- Add to ReverCycle a third operating mode: the ejector refrigeration cycle mode in order to increase its WHR potential.
- Experimentally validate ReverCycle by finalizing the testing phase of a proof of concept.

## NOMENCLATURE

| | | |
|---|---|---|
| MAC | Mobile Air Conitioning | |
| ORC | Organic Rankine Cycle | |
| WHR | Waste Heat Recovery | |
| WLTC | Worldwide harmonized Light vehicles Test Cycles | |
| $\dot{Q}$ | heat flux | (W) |
| $w$ | rotational speed | (rpm) |
| W | power | (W) |
| η | efficiency | (–) |

## REFERENCES


Bell, I., Wronski, J., Quoilin, S., Lemort, V., 2014, Pure- and Pseudo-Pure Fluid Thermophysical Property Evaluation and the Open-Source Thermophysical Property Library CoolProp,Ind. Eng. Chem. Res., 53, pp. 2498-2508.

Benouali, J., 2002, Etude et minimisation des consommations des systèmes de climatisation automobile, PhD diss., Ecole des Mines de Paris.

Crawley,D. B., Lawrie, L. K., Pederson,C. O., Winkelmann, F. C.,2000, EnergyPlus: Energy Simulation Program, *Ashrae Journal*, Vol. 42, pp. 49-56.

Dumont, O., Quoilin, S., Lemort, V., 2015, Experimental investigation of a reversible heat pump/organic Rankine cycle unit designed to be coupled with a passive house to get a Net Zero Energy Building, *Int. J. Refrig.*, Vol. 54, pp. 190-203.

Eborn, J., Tummescheit, H., Prölβ, K., 2005, AirConditioning – a Modelica Library for Dynamic Simulation of AC Systems, *Proceedings of the 4th International Modelica Conference*, pp. 185-192.

El Chammas, R., Clodic, D., 2005, Combined Cycle for Hybrid Vehicles, *SAE Technical Paper* 2005-01-1171.

Fanger. P.O., 1982, Thermal Comfort. Malabar FL: Robet E. Krieger Publishing Company

Freymann, R., Strobl, W., Obieglo, A., 2008, The turbosteamer: A system introducing the principle of cogeneration in automotive applications, *MTZ worldwide*, Vol. 69, Issue 5, pp. 20-27.

Heidrich, P., Krisch, T., 2014, Assessment of Waste Heat Recovery Options in Passenger Car Applications by Various Rankine Cycles, *Heat Transfer Eng*., 36:14-15, pp.1321-1331.

Horst, T. A., Tegethoff, W; Eilts, P., Koehler, J., 2014, Prediction of dynamic Rankine Cycle waste heat recovery performance and fuel saving potential in passenger car applications considering interactions with vehicles' energy management, *Energy Convers. Manag*, Vol. 78, pp. 438-451.

Johnson, V., 2002, Fuel Used for Vehicle Air Conditioning: A State-by-State Thermal Comfort-Based Approach, *SAE Technical Paper* 2002-01-1957.

Leduc, P., Smague, P., Leroux, A., Henry, G., 2017, Low temperature heat recovery in engine coolant for stationary and road transport applications, *Energy Procedia*, Vol. 129, pp. 834-842.

Lemort, V., Quoilin, S., Cuevas, C., Lebrun, J., 2009, Testing and modeling a scroll expander integrated into an Organic Rankine Cycle, *Appl. Therm. Eng.*, Vol. 29, pp. 3094–3102.

Mansour, C., Clodic, D., 2012, Dynamic modeling of the electro-mechanical configuration of the Toyota Hybrid System series/parallel power train, *Int J Automot Technol*, Vol.13, No. 1, pp. 143-166.

Schweiger, C., Dempsey, M., Otter, M., 2005, The PowerTrain Library: New Concepts and New Fields of Application, *Proceedings of the 4th International Modelica Conference*, pp. 457-466.

Quoilin, S., Desideri, A., Wronski, J., Bell, I., & Lemort, V.. 2014, ThermoCycle: A Modelica library for the simulation of thermodynamic systems. *Proceedings of the 10th International Modelica Conference*, pp. 683-692.