HAL
open science

Optimatility principles for the sustainability of electrical systems : a thermodynamic approach

Vincent Mazauric, Nadia Maïzi

To cite this version:

Vincent Mazauric, Nadia Maïzi. Optimatility principles for the sustainability of electrical systems : a thermodynamic approach. International Conference on Applied Energy - ICAE, Jul 2012, Suzhou, China. hal-01546324

HAL Id: hal-01546324

https://minesparis-psl.hal.science/hal-01546324v1

Submitted on 23 Jun 2017

HAL is a multi-disciplinary open access archive for the deposit and dissemination of scientific research documents, whether they are published or not. The documents may come from teaching and research institutions in France or abroad, or from public or private research centers.

L'archive ouverte pluridisciplinaire **HAL**, est destinée au dépôt et à la diffusion de documents scientifiques de niveau recherche, publiés ou non, émanant des établissements d'enseignement et de recherche français ou étrangers, des laboratoires publics ou privés.

OPTIMALITY PRINCIPLES FOR THE SUSTAINABILITY OF ELECTRICAL SYSTEMS: A THERMODYNAMIC APPROACH

Vincent Mazauric[1] and Nadia Maïzi[2]

1 Schneider Electric, Strategy & Innovation, 38TEC, 38050 – Grenoble cedex 9, France
vincent.mazauric@schneider-electric.com

2 Centre for Applied Mathematics, MINES ParisTech, BP 207, 06902 – Sophia Antipolis, France
nadia.maizi@mines-paristech.fr

ABSTRACT

At first sight, aiming for energy efficiency appears to penalize electricity carriers. A close look at electrical energy flow, from primary to final energy, reveals abysmally low efficiency, resulting from the generation mix, transmission and distribution losses, and obsolete equipment. As a consequence, the share of primary electricity has to be reduced in order to achieve low carbon society scenarios in line with energy saving policies.

Since it relies on a partial description of the electrical workflow, this viewpoint reveals certain weaknesses that need to be qualified with a long-term planning assessment. We propose circumventing this drawback using a thermodynamic analysis based on the Gibbs free energy of the electromagnetic field. In particular, the so-called Maxwell-Faraday law of induction is the local result of an optimal path towards reversibility of the entire power system, described as a monotherm engine. This approach supports a multi-scale analysis that naturally addresses those levels that involve huge losses, namely the functional materials, conversion devices and transmission network.

As a result, the role played by magnetic energy is clarified: although it is required locally for conversion purposes, magnetic energy's overall value governs the transmission of electrical power through the grid. In addition to indicating kinetic reserve, an evaluation of the power system's reliability should include an assessment of magnetic energy from the very first moment of fluctuation (typically a few *ms*).

Keywords: variational principles, thermodynamics, electromagnetic field, energy conversion, power systems, long term planning.

1. INTRODUCTION

Electricity is a very convenient way to deliver a huge amount of power to a dense area of demand. The predicted population densification means that electricity consumption will significantly increase over the coming decades. Future investments in the electricity sector during the next three decades are estimated at about US$ 10 Trillion [1], which is equivalent to 2/3 of total worldwide energy investment needs, involving all areas of the energy-supply chain, and is three times higher in real terms than investments made in the electricity sector over the past three decades.

Significant growth of the electricity sector is mainly based on the following assumptions: increased domestic energy demand in emerging countries, and the refurbishment of ageing facilities in developing countries. Moreover, the move to electricity is expected to promote technologies with lower environmental impacts in order to combat global warming due to greenhouse gas emissions and counterbalance fossil energy depletion.

While most scenarios on the future of the electricity sector assess a mix through available primary energy sources (hydro, nuclear, renewable, fossil, etc.), they usually neglect the actual energy efficiency of the electrical supply chain as a whole.

Indeed, electrical energy is severely disadvantaged by the efficiency of the Carnot cycle, transmission losses and the low performance of applications. If we analyze the chain linking the producer to the consumer in the conversion of the primary energy source to the final (commercial) energy supply, shown in figure 1, we find that electricity drains 3,767MToE of the primary energy source from a total of 10,376MToE for all fuels, to convert only 1,139MToE into final electricity. Further transformation of final energy into useful energy (the energy actually needed in line with available technologies) provides the overall "efficiency" of the "all-fuel" energy chain at around 37%, whereas it only reaches 27% in the specific case of electricity [3].

Moreover, this abysmal lack of efficiency may be exacerbated by the fact that the electrical power system is far from optimized, as illustrated by the electrical losses in the USA given in figure 2: for both sectors represented, the level of losses induced by electrical generation follows a rise in electricity demand.

Copyright © 2012 by ICAE2012

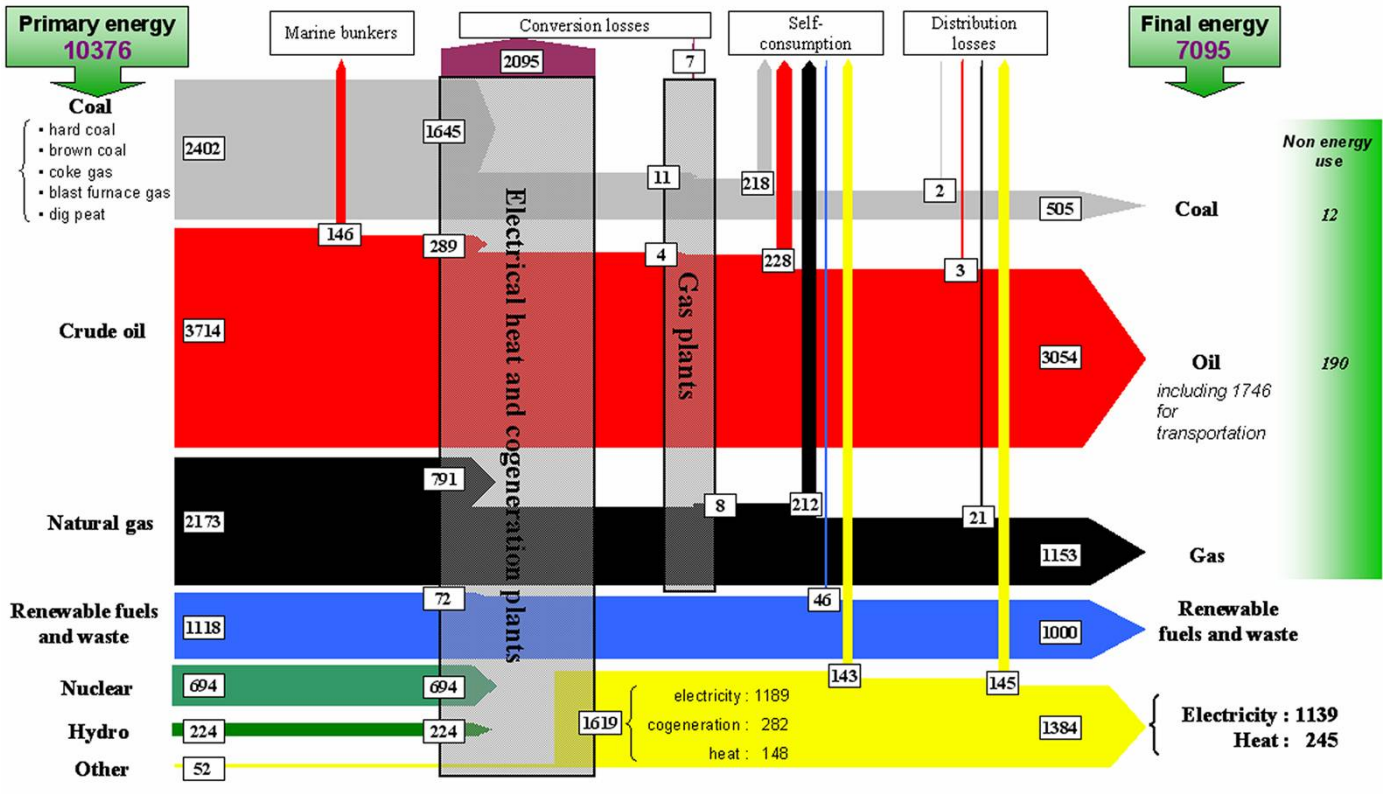

Figure 1 Energy supply chain (compiled from [2]).

Ultimately, electricity generation contributes 40% of global CO_2 emissions, before deforestation and transportation [5].

This could infer that state-of-the-art of electrical engineering does not allow energy efficiency of the whole electrical supply chain to be achieved.

In contrast, this paper provides an energy-efficient description of electromagnetism based on a reversible interpretation of Faraday's Law, first within a global description of the electrical system (see Sect. 2) then through a local focus (see Sect. 3). This type of physics-oriented framework appears suitable for the consolidation (i) in space, of all scales involved in the conversion process of the electromagnetic energy; (ii) in time, over the whole life-cycle of the electrical supply chain.

Section 3 explains how the latter, related to network management, facilitates a comprehensive and synthetic description of the power transmission grid. Lastly, the interplay between energy-efficient issues should be discussed within a long-term planning exercise dedicated to sustainable development of power systems (see Sect. 4).

Since electricity phenomena are derived through electromagnetism laws, we propose taking a variational approach leading from thermostatics to Maxwell's equation [6].

2. VARIATIONAL PRINCIPLES IN ELECTROMAGNETISM

To circumvent the impossibility of providing any deterministic evolution, thermodynamics assume that the steady-state of any system in contact with a thermostat is obtained from the maximum-entropy principle keeping the macroscopic information on the system including (see [7,8] and Appendix A):

- the positions of the moving bodies $\mathbf{X}$;
- the internal energy E; and, in the specific context of electromagnetism
- the magnetic flux ϕ;
- the electric charge Q extracted from the earth.

An equivalent description of any electrical system starts with the energy couplings, respectively (figure 3):

- the mechanical work exchanged with the actuators;
- the heat exchanged with the thermostat at temperature T;
- a magnetic term $(\phi\mathrm{I})$ where the magnetic flux ϕ is created by the electrical current I exciting the generator;
- an electrostatic term $(Q\mathrm{V}_0)$ where V_0 is the earth voltage.

and introduces the Gibbs potential as a functional of the state variables of the electrical system, respectively temperature T, the net currents provided by the generators I and the earth voltage V_0. Its minimum provides the Gibbs free-energy of the system $G(\mathrm{T},\mathrm{I},\mathbf{X})$ [9].

Copyright © 2012 by ICAE2012

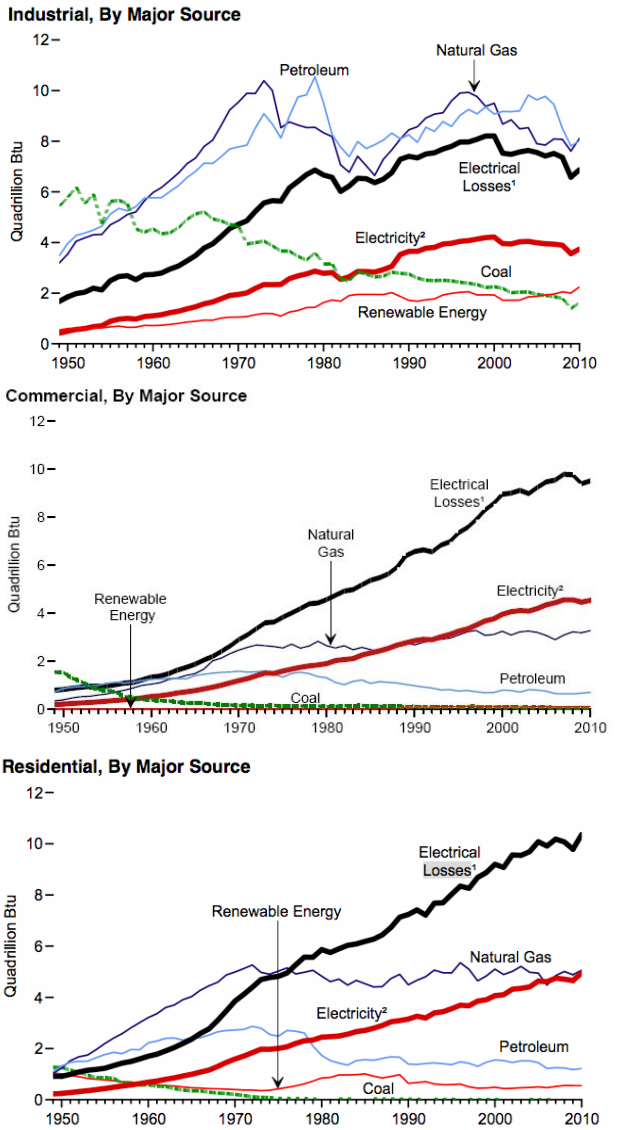

Figure 2 US industrial (up), commercial (middle) and residential (down) total energy consumption, Major sources, from 1950 to 2010 [4]: Electricity use (and related losses) expanded dramatically.

The statistical assignment also includes an explanation of the non-equilibrium conditions and irreversible processes, since equilibrium is merely an ideal-limiting case of the behavior of matter. In order to remain coherent with the maximum-entropy principle checked by an isolated system, two cases may be considered:

1. the evolution does not modify the entropy $S + S_{\text{th}}$ of the isolated system. Such an evolution is said to be reversible and involves mainly work exchanges, through sufficiently smooth variations in the energy couplings, namely:
   - the mechanical power exchanged between actuators $\mathrm{P}_{\text{mech}} = \sum \mathbf{F} \cdot \mathbf{V}$ where $\mathbf{V} = \frac{\mathrm{d}\mathrm{X}}{\mathrm{d}t}$ is the velocity of the moving body experiencing the external force $\mathbf{F}$; and in the context of electromagnetism
   - the electromagnetic coupling $\frac{\mathrm{d}(\phi \mathrm{I} + Q\mathrm{V}_0)}{\mathrm{d}t}$;

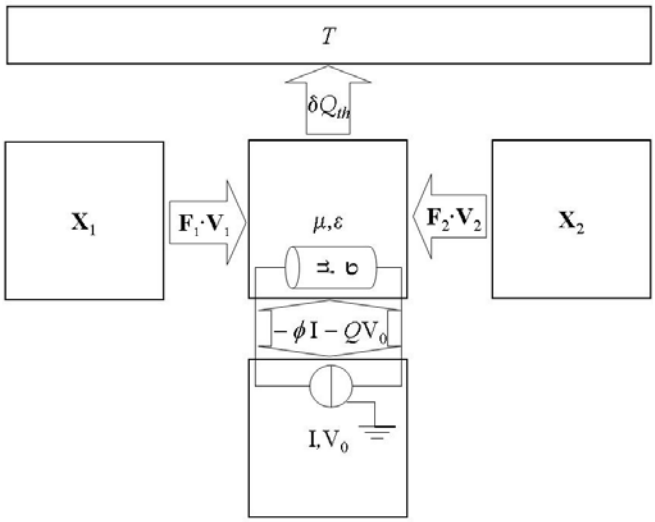

Figure 3 Chart of energy exchanges between the various subsystems involved in the thermodynamic framework. (μ,σ) and (μ,ε) denote respectively the behavior laws of conductors region C and dielectrics region D soaked with the electromagnetic field. While current generators and moving parts can only exchange work with the electromagnetic field (respectively through current variation and a modification of the boundary conditions on the moving parts), the thermostat, at temperature T, can only receive heat from the other sub-systems.

2. the evolution increases the entropy of the isolated system so that some of the work exchanged between actuators is dissipated in heat during the process: such an evolution is said to be irreversible.

The first principle conveys the energy conservation and reads[1]:

$$\frac{\mathrm{d}E}{\mathrm{d}t} + \frac{\mathrm{d}E_{\text{kin}}}{\mathrm{d}t} = \mathrm{P}_{\text{mech}} - \mathrm{T}\frac{\mathrm{d}S_{\text{th}}}{\mathrm{d}t} \tag{1}$$

where $\mathrm{T}\frac{\mathrm{d}S_{\text{th}}}{\mathrm{d}t}$ denotes the heat produced by the field, i.e. received by the thermostat, and E_{kin} is the kinetic energy embedded within the whole system (e.g. in the rotor of the electrical machines).

Hence, the irreversibility experienced by the system coupled with its thermostat may be inferred from the Helmoltz free-energy (called electromagnetic energy in the context of electrical engineering):

$$F = E - \mathrm{T}S \tag{2}$$

by expressing:

$$\mathrm{P}_{\text{mech}} - \frac{\mathrm{d}E_{\text{kin}}}{\mathrm{d}t} - \frac{\mathrm{d}F}{\mathrm{d}t} = \mathrm{T}\left(\frac{\mathrm{d}S}{\mathrm{d}t} + \frac{\mathrm{d}S_{\text{th}}}{\mathrm{d}t}\right) \tag{3}$$

where the right-hand side matches the power dissipated in heat by the whole system, commonly known as Joule losses P_{Joule}. According to the second principle, this term is always positive, and the lower the Joule losses, the more reversible the evolution. In order to explicitly take into account the inertial behavior of the electromagnetic

[1] In this work we generally use *italics* to denote variational parameters or functionals and roman type to specify their minimum values.

Copyright © 2012 by ICAE2012

coupling (Lenz' Law), it is convenient to use the Gibbs free-energy:

$$G = F - \phi \mathrm{I} - Q\,\mathrm{V}_0 \tag{4}$$

on which another reversible assignment may be expressed:

$$\mathrm{P}_{\mathrm{mech}} - \frac{\mathrm{dE}_{\mathrm{kin}}}{\mathrm{d}t} - \frac{\mathrm{dG}}{\mathrm{d}t} = \min\left(P_{\mathrm{Joule}} + \frac{\mathrm{d}(\phi \mathrm{I})}{\mathrm{d}t} + \frac{\mathrm{d}(Q\,\mathrm{V}_0)}{\mathrm{d}t} \right) \tag{5}$$

Within the quasi-static approximation, Faraday's Law of induction is achieved by forcing the condition of reversibility expressed by the Gibbs free energy, whereas the condition obtained from the Helmoltz free energy only restores the flow behavior of the direct current (see Appendix B).

Unfortunately, design and power management often take the latter approach which results in:

- an underestimation of the losses in all cases; and
- an unsuitable description of the relaxation mechanisms involved in power dynamics.

This state of the art jeopardizes the expected performances of the system, from deep within the material to the dynamic properties of the network. The following section aims to reconcile the reversibility requirement (5) at different scales in order to achieve energy efficiency and reliability in power systems.

3. FROM FIELD DESCRIPTION TO POWER MANAGEMENT

Thanks to a spatial spectral decomposition performed on the whole system [10], the basis of the current density consists in a superposition of well-split contributions from the atomic scales to the power network scales [11,12]. Assuming a mean-field hypothesis which consists in performing independent minimizations (5) for each mode, a consistent "coarse-graining" procedure is done by enforcing the conservation of the macroscopic information on the system between low- and high-spatial frequencies. By adopting a field description to restore –in an unbound way –the span of the electromagnetic coupling, this procedure brings valuable insight on the scale at which thermodynamic derivation is performed (see appendix B):

- As the state function of the system, Gibbs free energy G is unique. It follows that the magnetic flux density is divergence-free and that the voltage V_0 belongs to a potential map. Hence the maximum entropy principle provides locally positive static dielectric and magnetic behavior laws [6];
- At the device scale, the quasi-static approximation assumes only static averaged-charge density in the conductors, and this in fact turns out to be nil so as to respect the invariance of Joule losses under Galilean transformations. Thus, only free currents carried by conductors may yield heat losses. Assuming an even dependence of the Joule losses with the current density in conductors to prescribe invariance of the Joule losses with the inversion of time, some tedious variational calculations on (appendix B.1) yield the Maxwell-Faraday equation (appendix B.9) and restore the Ohm's law with motion (appendix B.8). This approach addresses a deeper justification of the Finite Element Method which consists in building an approximation of the variational formulation (appendix B.1) but with a finite number of degrees of freedom chosen on a mesh [13,14];
- So far the electrical network has been considered within a global description. Nevertheless, for a local focus on design and/or power management, it is convenient to introduce the electrical power $\mathrm{P}_{\mathrm{elec}}$ (appendix B.12) from the local power deviation in the domain Ω exhibited between the LHS and the RHS in (5) so that the contribution of Ω to (5) reads:

$$\mathrm{P}_{\mathrm{mech}}(\Omega) - \frac{\mathrm{dE}_{\mathrm{kin}}(\Omega)}{\mathrm{d}t} + \mathrm{P}_{\mathrm{elec}}(\Omega) - \frac{\mathrm{dG}(\Omega)}{\mathrm{d}t} \tag{6}$$

Hence, the electrical power balance on the network:

$$\sum_{\Omega} \mathrm{P}_{\mathrm{elec}}(\Omega) = 0 \tag{7}$$

locally enforces the conservation equation:

$$\mathrm{P}_{\mathrm{mech}}(\Omega) + \mathrm{P}_{\mathrm{elec}}(\Omega) = \mathrm{P}_{\mathrm{Joule}}(\Omega) + \frac{\mathrm{dF}(\Omega)}{\mathrm{d}t} + \frac{\mathrm{dE}_{\mathrm{kin}}(\Omega)}{\mathrm{d}t} \tag{8}$$

known as the integral form of the Poynting's equation.

Overall, the power dynamics experienced by the power network –the variation of the electrostatic term (QV_0) is negligible when studying the whole electricity network – follows:

$$\mathrm{P}_{\mathrm{mech}} = \mathrm{P}_{\mathrm{Joule}} + \frac{\mathrm{dF}_{\mathrm{m}}}{\mathrm{d}t} + \frac{\mathrm{dE}_{\mathrm{kin}}}{\mathrm{d}t} \tag{9}$$

This formulation is extremely important as it indicates the contributions of energy flows exchanged in order to realize the electricity grid balance in real-time. Indeed, while the network faces a transient in consumption or generation, its dynamics follow the power balance expressed in equation (9) where:

- the role of the dynamic reserves in magnetic energy F_{m} (also known as reactive energy) and kinetic energy $\mathrm{E}_{\mathrm{kin}}$ is highlighted to attenuate the fluctuation, and during which
- the magnetic coupling $(\mathrm{F}_{\mathrm{m}} - \mathrm{G}_{\mathrm{m}})$ has to remain at a high enough (mandatory positive) level to avoid any loss in the induction process (appendix C.9) and subsequent "black-out" in the transmission, according to (5).

As matter of fact, the magnetic energy enables electromechanical conversion and transmission throughout the network and ensures network stability, but it requires maintaining the excitation current in compensation. The latter is illustrated in figure 4:

- At $t = 10\mathrm{s}$, the network undergoes a 10% rise in electrical power consumption $\mathrm{P}_{\mathrm{elec}}$ (by adjustment of $\mathrm{R}_{\mathrm{load}}$). According to the relaxation time constants (appendix C.3,4 and Table 1), the magnetic energy F_{m} is immediately cut whereas the kinetic energy $\mathrm{E}_{\mathrm{kin}}$ undergoes a slow relaxation.

Copyright © 2012 by ICAE2012

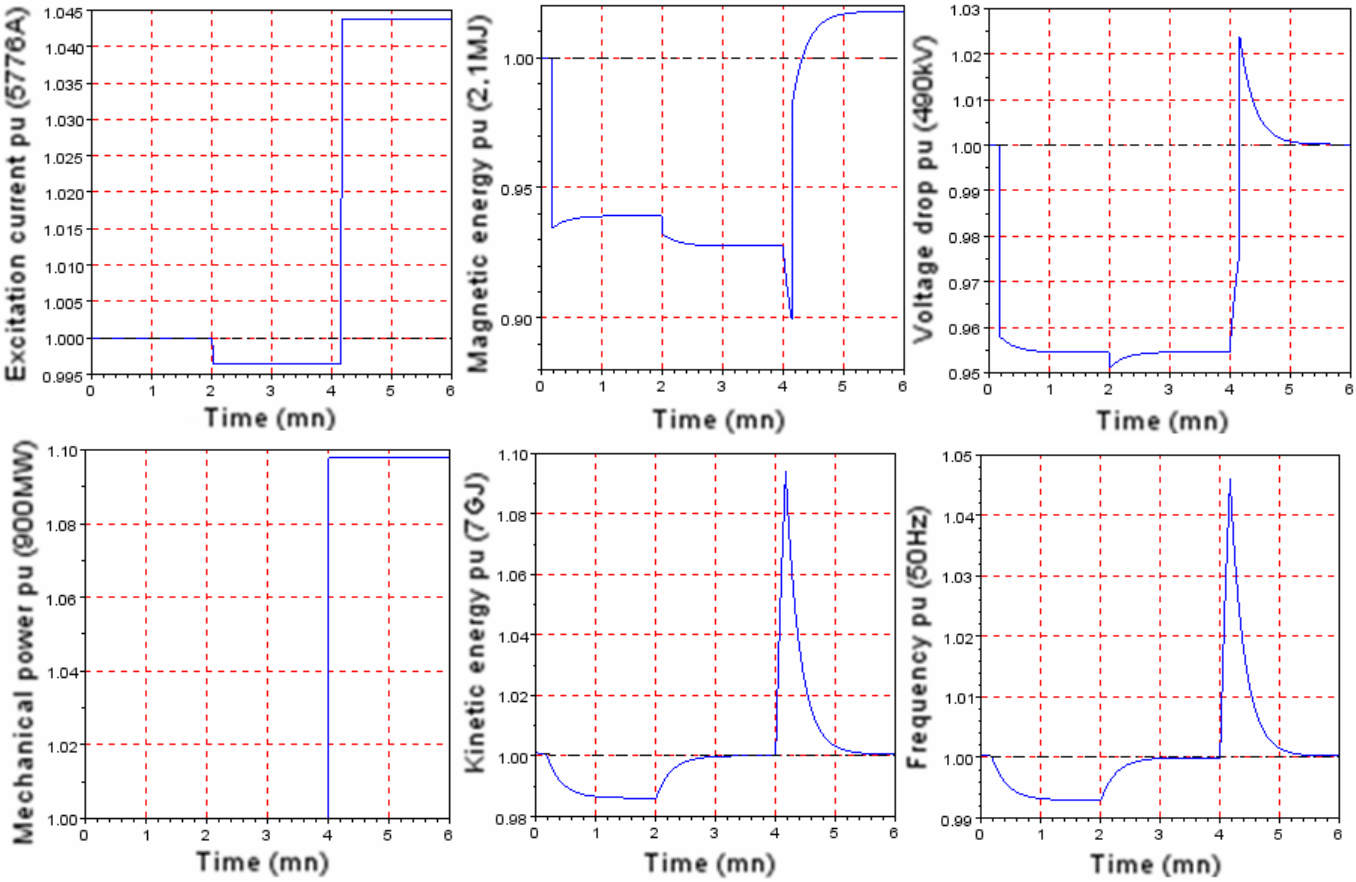

Figure 4 Behavior of the kinetic and magnetic reserves under fluctuation and control. Calculations are made thanks to a time-stepping integration of (appendix C.1) with a resolution of the phasor diagram (appendix C.2) at each time step. The rated values refer to appendix C Table 1.

- At $t = 2\text{mn}$, the rotor current I is adapted to restore the rated frequency, leading to new damage to the magnetic energy $\mathrm{F_m}$.
- At $t = 4\text{mn}$, the mechanical power $\mathrm{P_{mech}}$ is increased to restore the rated-terminal voltage U. To avoid very extensive dissipation of the magnetic energy $\mathrm{F_m}$ and rotor racing, the excitation current I is finally updated at $t = 4\text{mn}10\text{s}$ to restore a new set-point with rated frequency and terminal voltage.

Thus equation (9) emphasizes the critical roles played by the magnetic and kinetic energies along with the spinning reserve in monitoring load fluctuation: in order to maintain appropriate variations of frequency and voltage, a sufficient level of magnetic and kinetic energies and spinning reserve is required in the system.

Further analysis of the different time scales associated with the different terms of equation (9) make it possible to recover the three control levels involved in network operations. The dynamic management of a sudden imbalance is achieved within a time period that can range from:

- several milliseconds ($\mathrm{dF_m/dt}$) and seconds ($\mathrm{dE_{kin}/dt}$), which refer to primary control of the grid. This control re-establishes the balance between demand and generation at a system frequency other than the frequency set-point value (50 Hz). It causes a deviation in power exchanges between control areas from the scheduled values. The voltage regulators of generating units implement primary voltage control. These regulators initiate a variation in generator excitation, and magnetic energy is adjusted using automatic devices with a time response of less than a few seconds.
- up to several minutes ($\mathrm{P_{mech}}$), which refer to secondary or tertiary control of the grid. While the function of the secondary control is to restore the system frequency and voltage to their rated-values, the tertiary control aims at an economically efficient set point with respect to power exchanges between the control areas. Secondary and tertiary use either automatic control devices within a given zone of voltage control, or rely on the Transmission System Operator's manual action to activate compensation equipment.

Network management of this kind makes it possible to achieve a system that is both adequate (i.e. ability to satisfy aggregate electrical demand and energy requirements of customers at all times) and secure (i.e. ability to withstand sudden disturbances such as the unanticipated loss of system elements).

Copyright © 2012 by ICAE2012

4. CONCLUSION

The reversible interpretation of Faraday's Law provides new insight and challenges for improving the energy efficiency of the electrical system as a whole and is highly promising for further investigations [15]. It suggests that knowledge of the state of the reserves as described by equation (9) will be useful when comparing different technological options that satisfy the same electric demand. This is extremely relevant for assessing future electrical power systems.

Indeed, models for energy planning have proven useful in determining the energy sector's plausible evolution in the mid- and long-term in the face of strong environmental pressures, such as carbon mitigation or fossil energy depletion. Issues, such as pointing out the main drivers of the energy system at a given regional scale, anticipating changes and impacts of energy prices, and estimating pollutant emissions, require models of substitution possibilities through the whole energy chain [16,17]. For instance the MARKAL (MARKet ALlocation) type of technology-rich models provide a partial solution to this problem [18-20]. However, in order to assess the sustainability and robustness of these energy planning model results, it is necessary to provide a suitable description of electricity generation systems' time and space constraints. Namely, one should also assess:

- the continuity of electric power supply, related to the occurrence of power outages, defined as large-scale disruption in electric power supply;
- the quality of the electric power delivered, which means that voltage and frequency of the signal must remain between contractual bounding values. When electric power is delivered outside these bounding values, both producing and consuming equipments on the network may fail to perform correctly or disconnect.

Thus, to provide relevant comparisons between future electrical systems, we propose to make a proper assessment of the reserves involved in equation (9), in order to select the most relevant power system from between different alternatives. This analysis will ensure that electricity production modes are chosen for their dynamic nature to ensure the power balance [21].

ACKNOWLEDGEMENT

We would like to thank Dr. Mathilde Drouineau from Mines ParisTech and Mr. Cong Martin Wu from Schneider Electric for very fruitful discussions.

REFERENCES

[1] World Energy Investment Outlook 2003. Paris, France: Organisation for Economic Co-operation and Development/International Energy Agency, 2003.

[2] Key world energy statistics from the IEA. Paris, France: Organisation for Economic Co-operation and Development/International Energy Agency, 2004.

[3] Gibowski C. Les atouts de la conversion électromagnétique et électromécanique pour l'optimisation de l'efficacité énergétique. Optimisation des Systèmes Energétiques. Sophia Antipolis, France: Ecole des Mines de Paris, 2005.

[4] Annual Energy Review 2010. Washington DC, USA: Energy Information Administration, Department of Energy, 2011.

[5] Rogner H-H. Nuclear power and climate change (invited). United Nations Framework Convention on Climate Change Conference (COP-12). Nairobi, Kenya, 2006.

[6] Mazauric V. From thermostatistics to Maxwell's equations: A variational approach of electromagnetism. IEEE Transactions on Magnetics 2004;40 (2):945-8.

[7] Jaynes ET. Information theory and statistical mechanics. Physical Review 1957;106 (4):620-30.

[8] Garrett AJM. Macroirreversibility and Microreversibility reconciled: The second law. In: Buck B, Macaulay VA, editors. Maximum entropy in action. Oxford, UK: Oxford University Press, 1991. pp. 139-70.

[9] Morita T. Formal structure of the cluster variation method. Progress in theoretical physics 1994;115:27-39.

[10] Russakoff G. A derivation of the macroscopic Maxwell equations. American Journal of Physics 1970;38 (10):1188-95.

[11] Mazauric V, Maloberti O, Meunier G, Kedous-Lebouc A, Geoffroy O, Rebière Y. An energy-based model for dynamic hysteresis. IEEE Transactions on Magnetics 2005;41 (10):3766-8.

[12] Mazauric V, Drouineau M, Rondot L. Assessing anomalous losses with dynamic hysteresis models. International Journal in Applied Electromagnetics and Mechanics 2010;33 (1):95-101.

[13] Chari MVK, Salon SJ. Numerical Methods in Electromagnetism. San Diego: Academic Press, 2000.

[14] Rondot L, Mazauric V, Wendling P. An energy-compliant magnetodynamic error criterion for eddy-current calculations. IEEE Transactions on Magnetics 2010;46:2353-6.

[15] Maïzi N, Drouineau M, Mazauric V. Procédé d'estimation de la stabilité d'un système électrique (Schneider Electric Industries SAS/ARMINES). France: Institut National de la Propriété Industrielle. 2011, Patent FR 11 61087.

[16] Maïzi N, Assoumou E, Bordier M, Mazauric V. Key features of the electricity production sector through long-term planning: The french case. IEEE PES Power Systems Conference and Exhibition. Atlanta, GA, USA, 2006. pp. 54.

Copyright © 2012 by ICAE2012

[17] Selosse S, Assoumou E, Maïzi N, Mazauric V. Post-Kyoto policy implications on the energy system: A TIAM-FR long term planning exercise. 22nd World Energy Congress. Montreal, Canada, 2010.
[18] http://www.etsap.org/. Energy Technology Systems Analysis Programme.
[19] Fishbone LG, Abilock H. MARKAL, a linear programming model for energy systems analysis: Technical description of the BNL version. International Journal of Energy Research 1981;5:353-75.
[20] Assoumou E, Bordier M, Guerassimoff G, Grange C, Maïzi N. La famille MARKAL de modèles de planification énergétique: Un complément aux exercices de modélisation dans le contexte français. Revue de l'énergie 2004;558:357-67.
[21] Drouineau M, Maïzi N, Assoumou E, Mazauric V. A TIMES model of the Reunion Island for analysing the reliability of electricity supply. International Energy Workshop. Stanford, CA, USA, 2011.
[22] Shannon CE. A mathematical theory of communication. The Bell System Technical Journal 1948;27:379-423.
[23] Landau LD, Lifschitz EM. Electrodynamics of continuous media. New York, NY, USA: Pergamon, 1960.
[24] Christen T. Application of the maximum entropy production principle to electrical system. Journal of Physics D: Applied Physics 2006;39:4497-503.
[25] Mazauric V. Des principes thermodynamiques aux équations de Maxwell: Une approche variationnelle de l'électromagnétisme. In: Meunier G, editor. Champs et équations en électromagnétisme. Paris, France: Hermès, 2003. pp. 147-262.
[26] Hammond P. Energy methods in electromagnetism. New York, USA: Clarendon, Oxford University Press, 1981.
[27] Le-Bellac M, Lévy-Leblond J-M. Galilean electromagnetism. Il Nuovo Cimento 1973;14B (2):217-33.
[28] Park RH. Two Reaction theory of synchronous machines. AIEE Transactions 1929;48:716-30.

APPENDICES

1. Thermostatistics

To circumvent the impossibility of providing any degree of deterministic evolution of a complex system, a statistical description is adopted. Given the probability distribution $\widetilde{p}$, the lack of information on the system is given by the Shannon entropy [22]:

$$\widetilde{S} = S(\widetilde{p}) = -k\sum_i \widetilde{p}(x_i)\ln \widetilde{p}(x_i) \quad \mathrm{k} > 0 \qquad \text{(A.1)}$$

where $\{x_i\}_i$ describes the set of configurations assumed by the system.

The system's only unbiased uncertainty assignment consists in maximizing its entropy with respect to the macroscopic knowledge [7]. In other words, to use any other assignment would amount to an arbitrary assumption of information which, by hypothesis, we do not have. Hence, for each macroscopic expected value $\widetilde{A}_r$ of the random value $\mathcal{A}_r$:

$$\widetilde{A}_r = \sum_i \widetilde{p}(x_i)\mathcal{A}_r(x_i) \qquad \text{(A.2)}$$

the Lagrangian multipliers $\{\lambda_r\}_r$ are introduced to form the partition function:

$$Z(\lambda_1,\ldots,\lambda_r,\ldots) = \sum_i \exp\left(-\sum_r \lambda_r \mathcal{A}_r(x_i)\right) \qquad \text{(A.3)}$$

Then, the so-called Boltzmann-Gibbs' statistic law p gives the maximum-entropy probability with respect to the macroscopic averages (A.2):

$$p(x_i) = \frac{\exp\left(-\sum_r \lambda_r \mathcal{A}_r(x_i)\right)}{Z(\lambda_1,\ldots,\lambda_r,\ldots)} \qquad \text{(A.4)}$$

Furthermore, the values of the Lagrangian multipliers λ_r completely define the statistic law (A.4). The entropy of the system at the steady state $S(p)$ (denoted by S) follows:

$$\widetilde{S} \le S = k\left(\ln Z + \sum_r \lambda_r A_r\right) \qquad \text{(A.5)}$$

where A_r denotes the average provided by the maximum-entropy probability (A.4):

$$A_r = \sum_i p(x_i)\mathcal{A}_r(x_i) \qquad \text{(A.6)}$$

It follows from (3) that:

$$A_r = -\frac{\partial \ln Z}{\partial \lambda_r} \qquad \text{(A.7)}$$

Given this framework, the thermostatistic laws are restored by considering that the steady state of any physical system is at least known by its energy average, commonly called its internal energy and denoted E. Introducing the Hamiltonian $\mathcal{H}$ of the system [8], E is given by:

$$E = \sum_i p(x_i)\mathcal{H}(x_i) \qquad \text{(A.8)}$$

The related Lagrangian multiplier defines temperature T through the relation:

$$\lambda_1 = \frac{1}{\mathrm{k\,T}} \qquad \text{(A.9)}$$

where k is the so-called Boltzmann's constant. To ensure the convergence of (A.3), note that temperature T is always positive if the energy levels are positively unbounded. Hence, the other macroscopic averages are defined through a set of (chemical) potentials:

$$\alpha_r = -(\mathrm{kT})\lambda_r \qquad \text{(A.10)}$$

so that the inequality (A.5) may be replaced by:

$$\widetilde{E} - \sum_{r\ge 2} \alpha_r \widetilde{A}_r - \mathrm{T}\,\widetilde{S} \ge -\mathrm{kT}\ln Z = G(\mathrm{T},\ldots,\alpha_r,\ldots) \qquad \text{(A.11)}$$

$(\mathrm{T},\ldots,\alpha_r,\ldots)$ are also known as the system state variables.

The left-hand side of (A.11) defines the Gibbs' potential as a functional on the set of probability distributions $\widetilde{p}$. Its minimum, obtained for the Boltzmann's-Gibbs statistic law, provides the state function of the system: the so-called Gibbs' free energy G. Thus, the steady state may be viewed as a competition between (see figure 3 in the context of electromagnetism):

Copyright © 2012 by ICAE2012

- an ordered energy due to the internal interactions of the system $\widetilde{E}$ and couplings $-\alpha_r \widetilde{A}_r$ with some reservoirs ensuring the prescribed averages A_r through relevant values of the potentials α_r;
- a disordered energy $-\mathrm{T}\widetilde{S}$ induced by the maximum entropy assignment and enforced by the contact with a thermostat at temperature T.

If the Hamiltonian of the system $\mathcal{H}$ is parameterized by the boundary conditions $\mathbf{X}$, differential calculations obtained from (A.6) yield the variation of the Gibbs' free energy with respect to its state variables:

$$\mathrm{d}\,G = -\sum_{r\geq 2} A_r\,\mathrm{d}\,\alpha_r - S\,\mathrm{d}\,\mathrm{T} + \sum \mathbf{F}\cdot\mathrm{d}\,\mathbf{X} \qquad \text{(A.12)}$$

where the force $\mathbf{F}$ applied by the actuator $\mathbf{X}$ to the system is derived from the virtual works principle:

$$\mathbf{F} = \mathbf{grad}\,G \qquad \text{(A.13)}$$

Conversely, for isothermal processes, derivatives of the Gibbs' free energy provide state equations:

$$A_r = -\frac{\partial G}{\partial \alpha_r} \qquad \text{(A.14)}$$

As experimental evidence, the energy couplings in the context of electromagnetism refer to three contributions (figure 3):

- the boundary conditions prescribed by the positions of the actuators' moving bodies $\mathbf{X}$;
- a magnetic term $(\phi \mathrm{I})$ where the magnetic flux ϕ is created by the electrical current I exciting the generator;
- an electrostatic term $(Q\mathrm{V}_0)$ where Q is the electric charge squeezed from the earth at the voltage V_0.

In the following, a thermodynamic interpretation of Faraday's Law within the quasi-static approximation is given by adopting a local viewpoint.

2. Where electromagnetism is recovered

Usually, thermodynamic approaches to electromagnetism do not consider any extension towards time-varying regimes [23]. Whereas some improvements are summarized in [24] for steady state regimes, no general contribution is available for transients. The magnetodynamic behavior of any electrical system is derived from the functional [25]:

$$\mathrm{P}_{\mathrm{mech}} - \frac{\mathrm{dE}_{\mathrm{kin}}}{\mathrm{d}t} - \frac{\mathrm{dG}}{\mathrm{d}t} = \min_{\boldsymbol{H},\boldsymbol{E}}\left(\int_C \sigma^{-1}(\mathbf{curl}\boldsymbol{H})^2\,\mathrm{d}^3 r + \frac{\mathrm{d}}{\mathrm{d}t}\int\left(\mathbf{B}(\boldsymbol{H})\cdot\boldsymbol{H} + \mathbf{D}(\boldsymbol{E})\cdot\boldsymbol{E}\right)\mathrm{d}^3 r\right) \qquad \text{(B.1)}$$

where the functional in the RHS exhibits:

- the magnetic field $\boldsymbol{H}$ related to free and displacement currents according to the Maxwell-Ampere equation:

$$\mathbf{curl}\boldsymbol{H} = \boldsymbol{J} + \partial_t \boldsymbol{D} \qquad \text{(B.2)}$$

  While the quasi-static approximation enforces a vanishing electric displacement ($\mathbf{D}\equiv 0$) in conductors (i.e. no free charges), the charge conservation at the various interfaces provides the continuity equation:

$$\mathbf{n}\times\left([\boldsymbol{H}] - \mathbf{V}\times[\boldsymbol{D}]\right) = 0 \qquad \text{(B.3)}$$

  where $\mathbf{V}$ is the velocity of the interfaces in the rest frame, n the unit vector oriented by the interface and $[\cdot]$ denotes the discontinuity field occurring thereon;
- the Joule losses P_{Joule} monitored in conductors. This term is even to respect invariance of losses with the inversion of time (σ^{-1} is the resistivity);
- the time variation of the electromagnetic energy coupling the field with generator I and mass V_0;
- the magnetic $\mathbf{B}(\boldsymbol{h})$ and electrostatic $\mathbf{D}(\boldsymbol{e})$ behavior laws derived from thermostatic equilibrium of the Gibbs potential:

$$G(\mathrm{I},\mathrm{V}_0) = G_{\mathrm{m}} + G_{\mathrm{e}} = \int\left(\int_0^{\boldsymbol{H}}(-\boldsymbol{B})\cdot\delta\boldsymbol{h} + \int_0^{\boldsymbol{E}}(-\boldsymbol{D})\cdot\delta\boldsymbol{e}\right)\mathrm{d}^3 r \qquad \text{(B.4)}$$

  where flux density $\mathbf{B}$ and electric displacement $\mathbf{D}$ are divergence-free to ensure that G is a state-function.

Galilean covariance states that stationary conditions expressed from (B.1) do adopt a form independent of the Galilean frame where the time-derivation is performed. Introducing $\mathbf{V}'$ as the relative velocity of the frame (') in (B.1), some calculations on the convective derivative of the electromagnetic energy coupling yield the transformation law for the electric field:

$$\mathbf{E}' = \mathbf{E} + \mathbf{V}'\times\mathbf{B} \qquad \text{(B.5)}$$

whereas the flux density and the electric displacement are retained:

$$\mathbf{B}' = \mathbf{B} \qquad \text{(B.6)}$$

$$\mathbf{D}' = \mathbf{D} \qquad \text{(B.7)}$$

Hence, extending the electric field in a moving conductor (with the velocity $\mathbf{V}$) according to Ohm's law with motion:

$$\mathbf{E} = \sigma^{-1}\mathbf{J} - \mathbf{V}\times\mathbf{B} \qquad \text{(B.8)}$$

Maxwell-Faraday's equation:

$$\mathbf{curl}\,\mathbf{E} = -\partial_t \mathbf{B} \qquad \text{(B.9)}$$

and its subsequent continuity equation:

$$\mathbf{n}\times\left([\mathbf{E}] + \mathbf{V}\times[\mathbf{B}]\right) = 0 \qquad \text{(B.10)}$$

may be viewed as acting locally to make an overall check of the tendency towards reversibility. This striking property provides a thermodynamic-oriented insight into the variational theory of electromagnetism [26]. Hence, the functional (B.1) balances the time variations of the co-energy $(-\mathrm{G})$ and the mechanical power received by the field from the actuators $\mathrm{P}_{\mathrm{mech}} - \frac{\mathrm{dE}_{\mathrm{kin}}}{\mathrm{d}t}$ where $\mathrm{E}_{\mathrm{kin}}$ is the kinetic energy embedded within the whole system.

It should be noted that the Maxwell-Faraday equation (B.9) provides divergence-free flux density at any time, which is a mandatory condition to derive (B.5) in its usual form. Similarly, the transformation law of the magnetic field reads:

$$\mathbf{H}' = \mathbf{H} - \mathbf{V}'\times\mathbf{D} \qquad \text{(B.11)}$$

according to (B.3).

In order to consider sub-systems for design purposes or power management, it is convenient to introduce electrical power to the domain Ω:

$$P_{\mathrm{elec}}(\Omega) = -\oint_{\partial\Omega}(\boldsymbol{E}\times\boldsymbol{H})\cdot\mathbf{n}\,\mathrm{d}^2 r \qquad \text{(B.12)}$$

Copyright © 2012 by ICAE2012

so that the contribution of Ω to (B.1) reads:

$$P_{mech}(\Omega) - \frac{dE_{kin}}{dt}(\Omega) + P_{elec}(\Omega) - \frac{dG}{dt}(\Omega) \qquad \text{(B.13)}$$

Table B.1 Regimes allowed within the quasi-static limit (from [27]). The resolution is performed in two steps: The first (second) one involves the dominant (marginal) coupling. The arrow ($\Leftarrow$) denotes a field obtained from the main resolution which acts as a source for the marginal one.

	magnetic regime $\lvert \mathbf{B}\cdot\mathbf{H} \rvert >> \lvert \mathbf{D}\cdot\mathbf{E} \rvert$	electric regime $\lvert \mathbf{B}\cdot\mathbf{H} \rvert << \lvert \mathbf{D}\cdot\mathbf{E} \rvert$
conductors	$\mathbf{curl}(\sigma^{-1}\mathbf{curl}\mathbf{H}) = -\frac{d\mathbf{B}}{dt}$ $\mathrm{div}\,\mathbf{B} = 0$ $\mathbf{curl}\,\mathbf{H} = \mathbf{J}$ $\mathbf{B} = \mu\mathbf{H}$	N/A
dielectrics	$\mathrm{div}\,\mathbf{B} = 0$ $\mathbf{curl}\mathbf{H} = 0$ $\mathbf{B} = \mu\,\mathbf{H}$	$\mathrm{div}\,\mathbf{D} = 0$ $\mathbf{curl}\mathbf{E} = 0$ $\mathbf{D} = \varepsilon\mathbf{E}$
dielectrics	$\mathbf{curl}\,\mathbf{E} \Leftarrow -\partial_t\mathbf{B}$ $\mathrm{div}\,\mathbf{D} = 0$ $\mathbf{D} = \varepsilon\mathbf{E}$ $(\partial C)\ \mathbf{n}\times\mathbf{E} \Leftarrow \mathbf{n}\times(\sigma^{-1}\mathbf{J} - \mathbf{V}\times\mathbf{B})$	$\mathbf{curl}\,\mathbf{H} \Leftarrow \partial_t\mathbf{D}$ $\mathrm{div}\,\mathbf{B} = 0$ $\mathbf{B} = \mu\mathbf{H}$ $(\partial C)\ \mathbf{n}\times[\mathbf{H}] \Leftarrow \mathbf{n}\times(\mathbf{V}\times\mathbf{D})$
Contribution to the functional (B.13)	$P_{mech}(\Omega) - \frac{dE_{kin}}{dt}(\Omega) + P_{elec}(\Omega) - \frac{dG_m}{dt}(\Omega)$ (B.14)	$P_{mech}(\Omega) - \frac{dE_{kin}}{dt}(\Omega) + P_{elec}(\Omega) - \frac{dG_e}{dt}(\Omega)$ (B.15)

The set of transformation laws (B.6), (B.7), (B.5) and (B.11) is not compatible with the invariance of the behavior laws, at least in a vacuum. As quasi-static phenomena are observed, it is mandatory to admit that one coupling term in (B.1) is much more prevalent than the other. As a result, the quasi-static limit must be split into magnetic and electric regimes (Table B.1) [27]. It should be noted that the conductors are always depicted within the magnetic regime of the quasi-static limit.

3. A thermodynamic insight into generation

In order to quantify the order of magnitude of the magnetic and kinetic reserves along with their behavior under load fluctuation (figure 4), we adopt a one-loop power grid description where (figure C.1):

- generation is provided by a 3-phase synchronous machine, typically installed in a French nuclear plant (900MW);
- consumption is aggregated within a single Ohmic load, the variation of which enables us to study the system's dynamics under fluctuation.

On the one hand, the mechanical energy conservation rules the angular velocity of the rotor:

$$J\frac{d\Omega}{dt} = \frac{P_{mech}}{\Omega} - T \qquad \text{(C.1)}$$

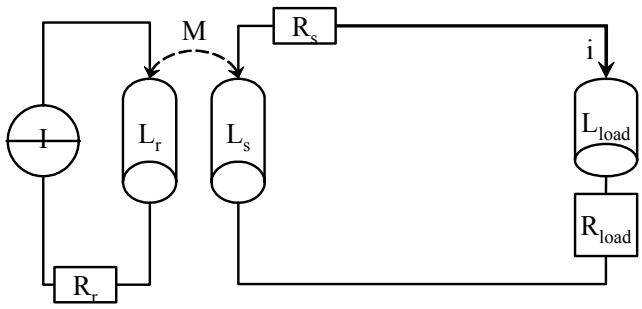

Figure C.1 Equivalent lumped circuit for the power system. When the rotor is made to rotate at a constant speed (primary), the three phases (secondary) experience a periodically varying magnetic field. Here they are gathered thanks to a Park's transformation [28].

On the other hand, the electric behavior of the secondary loop is given by the 2nd Kirchhoff's law:

$$R_{load}\,i + (L_{load} + L_s)\frac{di}{dt} = e(t) \qquad \text{(C.2)}$$

where the voltage drop across the transmission line is neglected, i is the current flowing in the winding/phase, and e is the electromotive force of the machine (opened-circuit voltage), given by Faraday's law of induction (appendix B.9).

Thanks to a first-order development of Ω around the rated shaft speed Ω_0 in (C.1), the resolution of (C.1) and (C.2) exhibits two relaxation time constants characterizing any fluctuation on the system. They are:

$$\tau_{elec} = \frac{L_{load} + L_s}{R_{load}} \qquad \text{(C.3)}$$

$$\tau_{mech} = \frac{J\Omega_0^2}{P_{mech}} \qquad \text{(C.4)}$$

corresponding respectively to the relaxation of both the current i and the shaft speed Ω. The typical characteristics of the system gathered in table C.1, provide the order of magnitude of these relaxation time constants. Introducing the electrical angular velocity:

$$\omega = p\Omega \qquad \text{(C.5)}$$

where p is the number of pairs of poles, the electrical period $(2\pi/\omega)$ appears:

- much higher than the electrical relaxation time constant τ_{elec}, i.e. a mechanically enforced steady-state regime is recovered in about one electrical period;
- much smaller than the mechanical relaxation time constant τ_{mech}, i.e. the shaft speed undergoes significant variation over a few hundred electrical periods.

As a result:

- assuming linear behavior, it is possible to adopt a time-harmonic description of the electrical part of the system, i.e. $\frac{d}{dt} \to j\omega$. Hence, the opened-circuit voltage drop is given by Faraday's Law (appendix B.9):

$$\bar{E} = M\bar{I}\omega \qquad \text{(C.6)}$$

Copyright © 2012 by ICAE2012

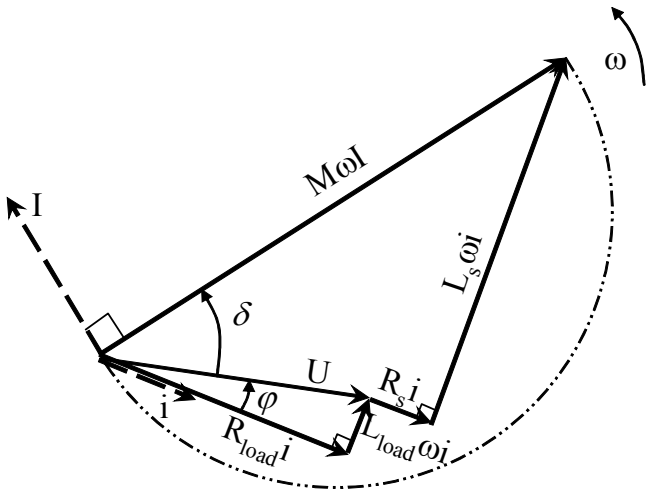

Figure C.2 Phasor diagram for the AC synchronous motor (round rotor model). The solid lines (resp. dashed) are associated with voltage drops (resp. current).

where the $^{-}$ stands for rms values, and the current i flowing in the winding may be analytically derived from figure C.2.

– the electrodynamical torque to take into account in (C.1) can be averaged over a period:

$$T = \frac{\overline{E}\,\overline{i}\cos(\delta+\varphi)}{\omega} \qquad \text{(C.7)}$$

After some calculations, the averaged magnetic Gibbs' free energy (appendix B.4) is consolidated from elementary components of the whole circuit (figure C.1) and reads:

$$G_m(\overline{I}) = -\frac{1}{2}L_r\overline{I}^2\left(1-\frac{L_s}{L_s+L_{load}}k^2\sin^2(\delta+\varphi)\right) \qquad \text{(C.8)}$$

where $0 \le k \le 1$ is the coupling coefficient of the machine. The magnetic flux, derived from (appendix A.14), is made up of two terms. The first is the flux in the rotor for an open-circuited stator, and the second reduces it by a revolving flux due to the load:

$$\overline{\Phi} = L_r\overline{I}\left(1-\frac{L_s}{L_s+L_{load}}k^2\sin^2(\delta+\varphi)\right) \qquad \text{(C.9)}$$

For perfect coupling and an inductance-free load, the magnetic flux vanishes at a power factor angle of 90°, leading to the collapse of the transmission. For time-harmonic regime, the magnetic energy is given by (4) and matches the so-called reactive energy whereas the electrical power supplied to the load (appendix B.12) corresponds to the active power. Moreover, the kinetic energy reads:

$$E_{kin} = \frac{1}{2}J\left(\frac{\omega}{p}\right)^2 \qquad \text{(C.10)}$$

Table C.1 Typical characteristics of the power grid. The lumped circuit elements are obtained thanks to a Park's transformation [28].

	symbol	Definition	value
generator	p	pair of poles	1
	J	moment of inertia of the shaft	$142\cdot10^3$kg·m^2
	R_r	rotor circuit resistance	0.5Ω
	L_r	rotor circuit inductance	0.2H
	R_s	stator winding resistance	1.02Ω
	L_s	stator winding inductance	0.645H
	M	rotor-stator mutual inductance (perfect coupling $k = 1$)	$k\sqrt{L_s L_r}$ 0.360H
load	R_{load}	load resistance	240 Ω
	L_{load}	load inductance ($\cos\varphi = 0.99$)	0.1H
network (rated values)	P_{mech}	mechanical power supplied	900MW
	$\overline{I}$	rotor excitation current	5,776A
	ω	electrical angular velocity	314rd/s
	$2\pi/\omega$	electrical period	20ms
	τ_{elec}	electrical relaxation time	3.1ms
	τ_{mech}	mechanical relaxation time	15.6s
	E_{kin}	embedded kinetic energy	7GJ
	F_m	magnetic energy	2.1MJ
	$\overline{E}$	opened-circuit voltage	651kV
	$\overline{U}$	terminal voltage	469kV
	$\overline{i}$	winding/phase current	1,935A
	P_{elec}	active power supplied	896MW
	δ	torque angle	38°
	$\delta+\varphi$	power factor angle	45°

Copyright © 2012 by ICAE2012