HAL
open science

On side refrigerant measurement of heat pump seasonal performances

Cong-Toan Tran, Philippe Rivière, Dominique Marchio, Christine Arzano-Daurelle, M. Coevoet

To cite this version:

Cong-Toan Tran, Philippe Rivière, Dominique Marchio, Christine Arzano-Daurelle, M. Coevoet. On side refrigerant measurement of heat pump seasonal performances. 10th International Energy Agency Heat Pump Conference 2011 - HPC 2011, May 2011, Tokyo, Japan. CD-ROM, paper 00051. hal-00770179

HAL Id: hal-00770179

https://minesparis-psl.hal.science/hal-00770179v1

Submitted on 4 Jan 2013

HAL is a multi-disciplinary open access archive for the deposit and dissemination of scientific research documents, whether they are published or not. The documents may come from teaching and research institutions in France or abroad, or from public or private research centers.

L'archive ouverte pluridisciplinaire **HAL**, est destinée au dépôt et à la diffusion de documents scientifiques de niveau recherche, publiés ou non, émanant des établissements d'enseignement et de recherche français ou étrangers, des laboratoires publics ou privés.

ON SIDE REFRIGERANT MEASUREMENT OF HEAT PUMP SEASONAL PERFORMANCES

C. T. Tran, PhD student, Centre for Energy and Processes, MINES ParisTech, Paris, France
P. Rivière, Assistant Professor, Centre for Energy and Processes, MINES ParisTech, Paris, France
D. Marchio, Professor, Centre for Energy and Processes, MINES ParisTech, Paris, France
C. Arzano-Daurelle, Research Engineer, ENERBAT, Electricity of France R&D, Moret/Loing, France
M. Coevoet, Research Engineer, ENERBAT, Electricity of France R&D, Moret/Loing, France

Abstract
Heat pump systems have become very popular for space heating in the residential sector in Europe. However, there is no data available on the in situ seasonal heating performances of air-to-air heat pumps. This is due to the difficulty of measuring their thermal capacity on field over a long period. Several methods relying on air flow rate and enthalpy measurements are being considered for in-situ measurement for air-to-air heat pumps. But accuracy and reliability of these methods are still unknown.

In this paper, we show the results of a method based on intrusive measurements (on the refrigerant side) adapted to the dynamic behavior. This method uses Coriolis flow meters measures for the refrigerant flow rate and for enthalpies. Results confirm that the refrigerant density measurement with a Coriolis flow meter can help to predict the refrigerant vapor quality with a satisfying accuracy if the quality is not too high.

The method is validated by testing an air-to-water heat pump in laboratory and by using the water enthalpy method as a reference. The experimental results show that the method is reliable in dynamic conditions (including during the defrosting periods). This internal method can be used as a reference to check the air enthalpy method for air-to-air heat pumps.

Keywords : heat pump, HSPF, enthalpy measurement methods, experimentation, Coriolis flow meter, ultrasonic flow meter, refrigerant

1 INTRODUCTION

1.1 Context

Heat pump is one of the solutions promoted in order to reduce the energy consumption and the GHG emissions of heating systems in buildings. In this context, the use of residential heat pumps (HPs) for heating has been rapidly spreading in Europe because of their theoretically high efficiency. Reliable laboratory data of residential HP performances tested in standard conditions (EN-14511 2008) are available. A number of brands give relatively good laboratory performance. But the situation may be different for the field tests due to the quality of installation, the design of the heating system, the climatic conditions, and so on. (Ichikawa, Anna et Satoshi 2007) in situ results on an air-to-air HP exhibit a very low heating seasonal performance factor (HSPF).

For water-to-water or air-to-water HPs, the heating energy delivered is commonly measured on field by measuring the energy supplied to the water circuit (water temperature and water flow rate measures). However, for air-to-air HPs there is almost no in situ HSPF measurement, with the exception of (Ichikawa, Anna et Satoshi 2007). The reason is that there is not any reliable and simple field measurement method to measure the heat supplied by the condenser. This is due to the difficulty of measuring the air flow rate and the air enthalpy on field over a long time period. We present hereafter a short literature review of the methods used in existing residential HP tests and look how far they could be used for in situ measurements.

1.2 Literature review

Test methods for HSPF of air-to-air HP in real conditions are classified in two categories: external and internal methods. The former is based on the measurements of the air flow rate and of the air enthalpy. The latter is based on the measurements of the refrigerant flow and properties inside the refrigerating circuit.

An external method tested on field is shown in (Ichikawa, Anna et Satoshi 2007). During the tests, the air flow rate and direction of the indoor units were fixed. Multi point measurement of air temperature, humidity and velocity is done at the outlet and inlet of the indoor units. Velocity measurement is used to determine the ratios of velocity at each point to velocity at center point, also called ratio velocity distribution. The air velocities are then corrected, by keeping the ratio velocity distribution; so that the air flow rate obtained from velocities integration matches the value given by the manufacturer. By combining with the measured temperatures and humidity ratios, the heating energy calculation was then performed. Another example of external method test is presented in (Riviere, et al. 2010). A preparation phase before the test is intended to determine the ratio velocity distribution at the inlet side of the indoor unit through a multi point measurement. During tests, the multi point measurement system is dismounted and the ratio velocity measurement is assumed to be constant. Air velocity is measured at only one point and velocities of all others points are found out thank to the ratio distribution. The air flow rate variations can then be computed from measurement. The heating energy is computed thanks to the measurements of the inlet and outlet temperatures (and humidity ratios for the cooling mode). The main limit of both methods is the unknown accuracy, which is thought to be low, as the heating capacity is a direct function of the air flow.

An internal method tested in laboratory is presented in (Teodorese, Detroux et Lebrun 2007). The refrigerant flow rate is measured by a Coriolis flow meter installed at the exhaust side of the condenser (in heating mode). The refrigerant enthalpies are computed from the measurement of the temperatures and pressures at the supply and exhaust of the condenser. Two air-to-air HPs were tested in laboratory in steady state conditions. In comparison with the calorimeter method, the internal method gives a relatively good accuracy. The maximal relative difference between these two methods is about 6.8% in heating mode. Measurement uncertainties of both methods are not shown in the paper. The main drawback of this method is the difficulty of the installation of the flow meter in situ.

It's also possible to use the compressor to determine the refrigerant flow rate by using the energy balance of the compressor. The compressor heat loss factor η is assumed to be known. The refrigerant flow rate can then be computed as:

$$\dot{m}_r = \frac{(1-\eta)P_{com}}{h_{r,com,ex} - h_{r,com,su}}$$

where *P* is electric power, *h* is specific enthalpy, subscripts *r, com, ex*, and *su* refer to refrigerant, compressor, exhaust side and supply side respectively.

(Fahlén 2004) provides examples using this internal method. 110 tests on 13 water-to-water or air-to-water HPs were tested either in laboratory or in situ. The accuracy is better than ±15% in comparison with the enthalpy measurements on the water side. The main advantage of this method is to eliminate the need for a flow meter. But the accuracy is low, especially in dynamic conditions, due to the unmeasured factor η. In addition, this method cannot be used for HP with a gas injection compressor.

1.3 Objectives

This literature review shows that there is not fully satisfying in situ measurement method for the HSPF of residential HP. On the one hand, external methods are possibly used for HSPF test on field over a long time period but their accuracy has been unknown. On the other hand, internal methods using a refrigerant flow meter give an acceptable accuracy in steady state conditions but it is difficult to apply this method on field and the accuracy of the method in dynamic conditions is not known.

One solution is to validate the candidate external methods by using an internal method as a reference. This validation can be carried out in a laboratory simulating real climate conditions or in an experimental house. But in the first place, the internal method must be validated in dynamic conditions.

In this paper, we introduce an alternative internal method. It takes into account the fact that the refrigerant might still be diphasic at the outlet of the condenser, as this unexpected state probably occurs in dynamic conditions. This method is validated in laboratory by testing on an air-to-water HP in heating mode and doubling the measurements using the water enthalpy method in different operating conditions (steady state and dynamic conditions). The advantages of this alternative method are that: (1) the working performance is disclosed in larger operating range of the HP and (2) it provides information on the cause of any difference.

In what follows, we will present the measurement principle, then the test bench to validate this method, and finally the results obtained before to discuss the results.

2 DESCRIPTION OF THE INTERNAL MEASUREMENT METHOD

The main difficulty of the HSPF test is to measure the heat exchange in the condenser (the heating power). This heat exchange can be determined with the measurements of the refrigerant enthalpy change and of the refrigerant flow rate.

2.1 Flow Rate Measurement

The flow rate can be measured at condenser exhaust (liquid line) or at condenser supply (compressor discharge line). In the liquid line, the refrigerant might be diphasic. Measurement of diphasic fluid is never easy. So, we propose to measure the refrigerant flow in the compressor discharge line where the refrigerant is always in the gas phase. This measure can be performed with a Coriolis or with an ultrasonic flowmeter.

2.2 Enthalpy Changes Measurement

Refrigerant pressures and temperatures are measured at condenser supply and exhaust. Whether the refrigerant is in diphasic conditions at the condenser outlet, the refrigerant vapor quality must be measured in order to determine the refrigerant enthalpy change in the condenser.

For this purpose, two measurement methods in the liquid line are considered. The first one is based on the density measurement with the Coriolis flow meter. Combining this measure with the tabulated densities of the liquid and gas saturated phases enables to determine the refrigerant vapor quality. The other solution is based on the refrigerant velocity measurement with an ultrasonic flow meter. Two technologies can be considered: a transit-time ultrasonic flow meter, which measures the velocity of the liquid phase, and a Doppler ultrasonic flowmeter, which measures the velocity of the gas bubbles. In both cases, the combination of

the measured velocity and of the refrigerant flow rate (measured by gas flow meter at the compressor exhaust) allows the determination of the refrigerant quality.

The measurement with the Coriolis solution is forcedly intrusive while the ultrasonic technologies allow either intrusive measurement (in-line type) or non-instructive measurement (clamp-on type). The main drawbacks of these measurements are that: (1) the flow meters don't operate correctly on diphasic refrigerant of high vapor quality; (2) the accuracy for diphasic refrigerant is not guaranteed by manufacturers.

The following part introduces a test bench to validate the internal measurement method.

3 EXPERIMENTS

3.1 Experimental Apparatus

The internal method presented above was tested in laboratory on an air-to-water inverter split HP in heating mode. A simplified scheme of the test bench is shown in Figure 1.

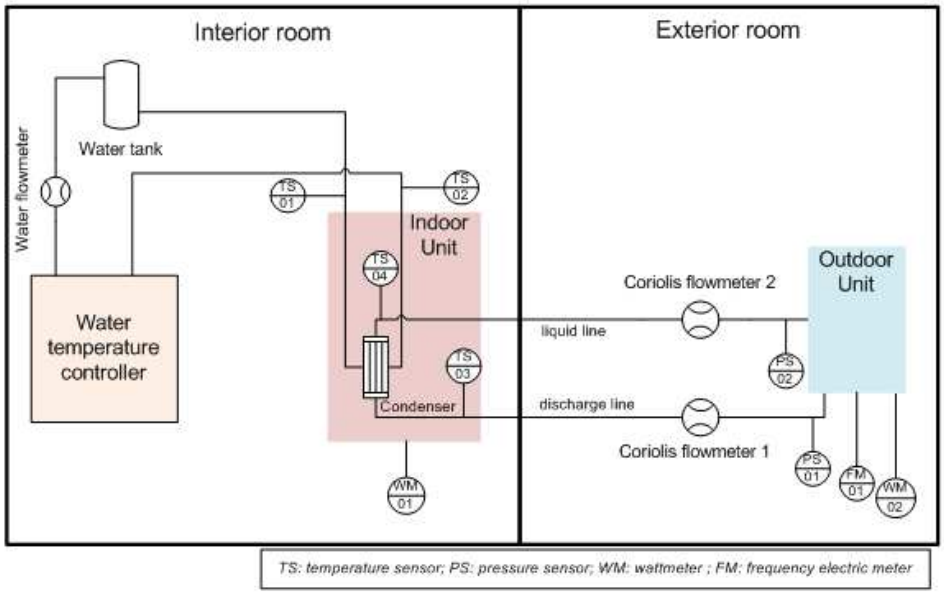

Figure 1. Flow chart of the test bench

The outdoor unit was installed in a climatic chamber, called exterior room. The indoor unit was installed in another room, called interior room and connected to a water loop. The water loop is fitted with a water temperature controller and a water tank, which enables to control the water temperature at the inlet of the heat pump condenser.

Because of the small refrigerant pipes (diameters of 15.8 mm and 9.5 mm for the discharge line and liquid line respectively), non intrusive refrigerant flow measurement with clamp-on ultrasonic flowmeters is not appropriate. Using the intrusive method, two Coriolis flowmeters were installed between the indoor and outdoor units. The first one in the discharge line measures the refrigerant mass flow rate. The other one in the liquid line measures the refrigerant density which helps to determine the refrigerant vapor quality. The refrigerant pressures at the condenser supply and exhaust were measured at indoor and outdoor units connections with an instrument accuracy of 0.1 %. The refrigerant temperatures were measured by contact PT100 thermometers installed immediately at condenser supply and exhaust. Their instrument accuracy is 0.05 K. The tests in (LNE 2004) show a difference of 0.75 °C between by contact PT100 thermometer and intrusive sensor. Finally, the uncertainty of the by contact PT100 thermometers is 0.8 °C.

On the water side, the water volume flow rate and condenser supply and exhaust water temperatures were measured with accuracy of 1.2 % and of 0.05 K respectively.

The compressor rotation speed was measured via the electric frequency measurement at the compressor electric input. The electric consumptions of the two units were also measured with an accuracy of 0.6 %. Finally, the measurement of the exterior room temperature was done with two PT100 thermometers situated at the center of two outdoor unit fans on the outdoor unit inlet side. The precision of the data acquisition system is 0.1 %. It is added to all variable uncertainties while performing the uncertainty propagation calculation. The measurement variables were recorded with a sampling rate of 10 seconds. Then, total uncertainties on heating power and HSPF could be computed.

3.2 Calculation Method

3.2.1 Oil concentration

There is few experimental data regarding the oil concentration in the refrigerant for heat pump cycles in real conditions. (Zehnder 2004) describes experiments led on a residential HP with the R407C and R134a refrigerant fluids and a synthetic oil of type Polyol-ester (POE). Using a Fourier transform infrared spectrometry, oil mass concentrations in the liquid line were observed to be in the range of 0.2 % to 0.4 %. (Youbi-Idrissi, et al. 2003) shows tests performed on a refrigeration system of large capacity with the refrigerant R407C and a POE oil. The oil mass concentrations in the liquid line were observed to be of about 3 % with a density flowmeter method and of about 1.8% with a sampling method. The tests presented in (Teodorese, Detroux et Lebrun 2007) assume the circulating oil fraction to be of 2 %.

The tested HP uses the R410A refrigerant and POE oil. In this paper, we assume an oil mass concentration of 2 %. The density (in kg/m^3) and the specific heat at constant pressure (in kJ/kg.K) of the oil are computed as follows (Conde 1996) (Liley et Gambill 1973):

$$\rho_{oil}(T) = \rho_{oil}(T_0) - 0.6(T - T_0) \qquad c_{p,oil}(T) = \frac{1.684 + 0.0034T}{\sqrt{s}}$$

where T is the oil temperature in °C ; the oil density at T_0 is given by manufacturer (in our test $\rho_{oil}(38) = 998$ kg/m^3) and s is the ratio of the oil density to water density at 15.56°C.

3.2.2 Void fraction correlations

Fluid density measurement allows the determination of the void fraction of diphasic fluids. Correlations of void fractions are needed to determine the vapor quality. More than sixty void fraction models are known in the literature (Woldesemayat et Ghajar 2007). But not all these models can be applied for refrigerant fluid, in particular for R410A fluid in our tests, and for horizontal pipe. Main void fraction correlations for refrigerants can be found in (Rice 1987). The literature comparison with experimental data presented in (Rice 1987) shows that the best void fraction models for refrigerant fluids in condensers are Hughmark (Hughmark 1962), Premoli (Premoli, Francesco et Prina 1971), Tandon (Tandon, Varma et Gupta 1985), and Baroczy (Baroczy 1965) models. It's noted that the Premoli model gives an approximate average of these models.

Experiments on an R410A air conditioner (Ma, et al. 2009) show that the Premoli model, Zivi model and Harms model give the best results for the condenser and that the Premoli model, Zivi model and Smith model are best models for the evaporator. In our experiments, we measure the refrigerant vapor quality in the "liquid line" where the refrigerant state is supposed to be either pure liquid and near liquid diphasic state. So, the Premoli model and Zivi model are the most appropriate choices. In this paper, we use the Premoli model.

3.2.3 Calculation method

The heating power on the water side is defined as:

$$\dot{Q}_w = q_w \rho_w c_{p,w} \left(T_{w,ex} - T_{w,su} \right)$$

where *q* is volume flow rate; ρ is density ; subscripts *w,ex,su* refer to water, exhaust side and supply side respectively.

On the refrigerant side, the heating power calculation requires to determine the refrigerant enthalpies at condenser supply and exhaust. The oil mass concentration *Cg* is assumed to be 2%. At condenser exhaust, the liquid refrigerant density is determined first. Measured mixture refrigerant-oil density can be expressed by an ideal mixing law as:

$$\frac{1}{\rho_m} = \frac{Cg}{\rho_{oil}} + \frac{1-Cg}{\rho_r}$$

where subscript *r, oil, m* refer refrigerant, oil and mixture oil-refrigerant respectively.

Solving this expression leads to the following equation:

$$\rho_r = \frac{(1-Cg)\rho_m . \rho_{oil}}{\rho_{oil} - Cg\rho_m}$$

Then, we check whether the refrigerant is diphasic. For this purpose, we prefer to use the refrigerant density than the temperature as criterion. Indeed, the temperature glide of the R410A refrigerant is about 0.1 °C while the density of the diphasic R410A refrigerant varies between 100 and 1000 kg/m^3 in order of magnitude. In what follows, *p, T* and *h* refer pressure and temperature and enthalpy respectively; subscripts *liq, vap* refer saturated liquid phase and saturated gas phase respectively. There are 3 possible scenarios:

- If the refrigerant density is greater than the saturated liquid phase density $\rho_r > \rho_{r,liq}(p)$, the refrigerant is in the liquid phase. The refrigerant vapor quality *x* is null. If the measured temperature is smaller than the saturated liquid phase temperature $T_r < T_{r,liq}(p)$, the refrigerant enthalpy is computed from temperature and pressure $h_r = h(T,p)$. If it is not, we assume the enthalpy to be the saturated liquid phase enthalpy $h_r = h_{r,liq}(p)$.
- If the refrigerant density is smaller than the saturated gas phase density $\rho_r < \rho_{r,vap}(p)$, the refrigerant is in the gas phase. The refrigerant vapor quality *x* is unity. If the measured temperature is greater than the saturated gas phase temperature $T_r > T_{r,vap}(p)$, the refrigerant enthalpy is computed from temperature and pressure. If it is not, we assume the enthalpy to be the saturated gas phase enthalpy $h_r = h_{r,vap}(p)$.
- If the refrigerant density lies between the saturated liquid vapor phase densities $\rho_{r,vap}(p) \le \rho_r \le \rho_{r,liq}(p)$, the refrigerant is in the diphasic phase. The Premoli model is used to find the vapor quality. Indeed, on the one hand the Premoli model gives the relation between the vapor quality *x* and the void fraction α as follows:

$$\alpha = \frac{1}{1 + \frac{1-x}{x} PI_1 . S} \quad PI_1 = \frac{\rho_{vap}}{\rho_{liq}} \quad S = 1 + F_1 \left[\frac{y}{1+yF_2} - yF_2 \right]^{1/2} \quad y = \frac{x\rho_{liq}}{(1-x)\rho_{vap}}$$

$$F_1 = 1,578 . \mathrm{Re}_f^{-0,19} PI_1^{-0,22} \quad F_2 = 0,0273 . We_f \mathrm{Re}_f^{-0,51} PI_1^{0,08} \quad \mathrm{Re}_f = \frac{GD}{\mu_{liq}} \quad We_f = \frac{G^2 D}{\sigma \rho_{liq}}$$

where G is mass flux, D is inner pipe diameter, μ is dynamic viscosity and σ is surface tension.

On the other hand, the void fraction can be calculated as follows: $\alpha = \dfrac{\rho_{r,liq} - \rho_r}{\rho_{r,liq} - \rho_{r,vap}}$

Hence, the vapor quality is the solution of the following equation:

$$\frac{\rho_{r,liq} - \rho_r}{\rho_{r,liq} - \rho_{r,vap}} = \frac{1}{1 + \frac{1-x}{x} PI_1.S}$$

The refrigerant enthalpy is then computed as follows: $h_r = x.h_{r,vap}(p) + (1\text{-}x)\, h_{r,liq}(p)$

At the condenser supply, the refrigerant enthalpy is computed from temperature and pressure because the fluid is always in the gas phase. Finally, heating power is computed from refrigerant enthalpies difference and oil sensible heat as follows:

$$\dot{Q}_m = \dot{m}_m \left[(1 - Cg)\left(h_{r,su} - h_{r,ex}\right) + Cg\left(h_{oil,su} - h_{oil,ex}\right) \right]$$

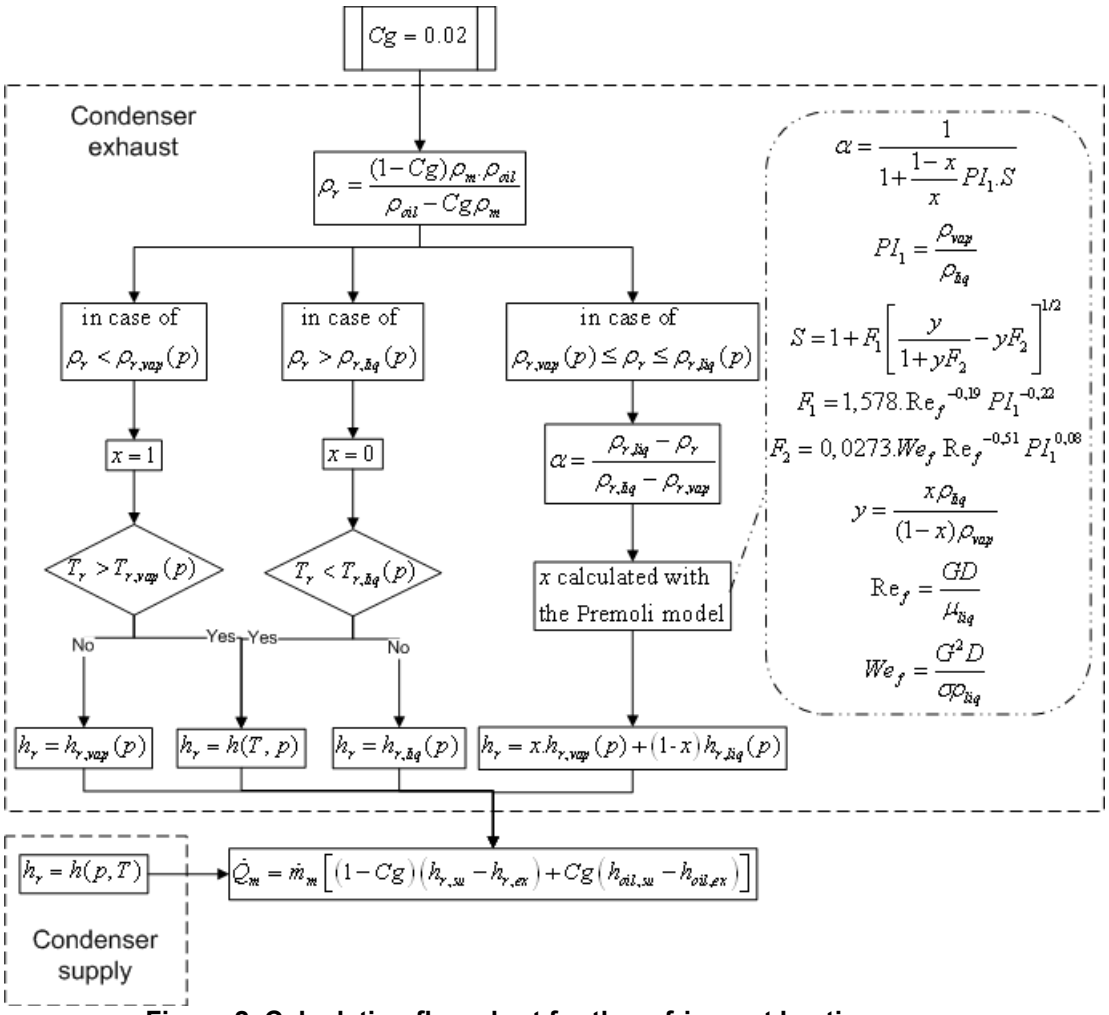

Figure 2. Calculation flow chart for the refrigerant heating power

The refrigerant thermodynamic properties are calculated with Refprop8 (NIST 2009). The calculation method for the heating power on the refrigerant side is summarized in Figure 2. The average relative difference between the heating powers on both sides is calculated by the following formula:

$$\varepsilon = \frac{\sum \dot{Q}_r}{\sum \dot{Q}_w} - 1$$

where the sum is taken over a period of time.

4 RESULTS

Our tests were divided into two phases: steady-state and dynamic tests.

4.1 Steady-state Tests

Thanks to the technical information provided by manufacturer of the HP, compressor rotation speed can be fixed. The inlet water temperature of the HP was maintained at 40°C, and the heat pump was tested under different exterior room temperatures, in steady state conditions. Figure 3 shows the refrigerant vapor quality and the relative difference between the heat power measured on the water side and on the refrigerant side for the different test conditions. All tests give differences between -2.5 % and +7.5 %. In particular, the relative differences for tests with null quality at condenser exhaust ranges from -0.2 % to +0.8 %.

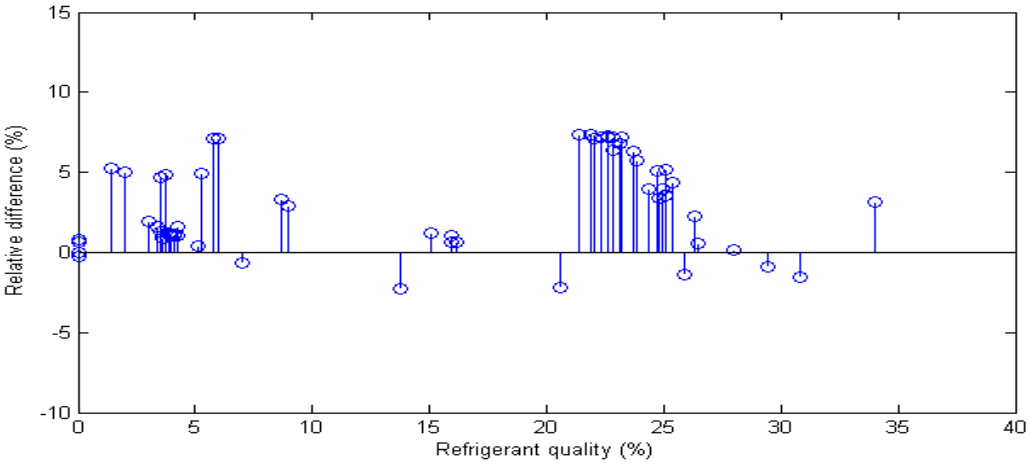

Figure 3. Refrigerant vapor quantity at condenser exhaust and relative difference of measured heating capacity on refrigerant side compared to water side

4.2 Dynamic-state Test

The HP was reset in “normal mode” wherein the system controller sets the compressor rotation speed. Both the inlet water temperature and the exterior room temperature were varied. Some of the results obtained for this type of dynamic test are shown hereafter.

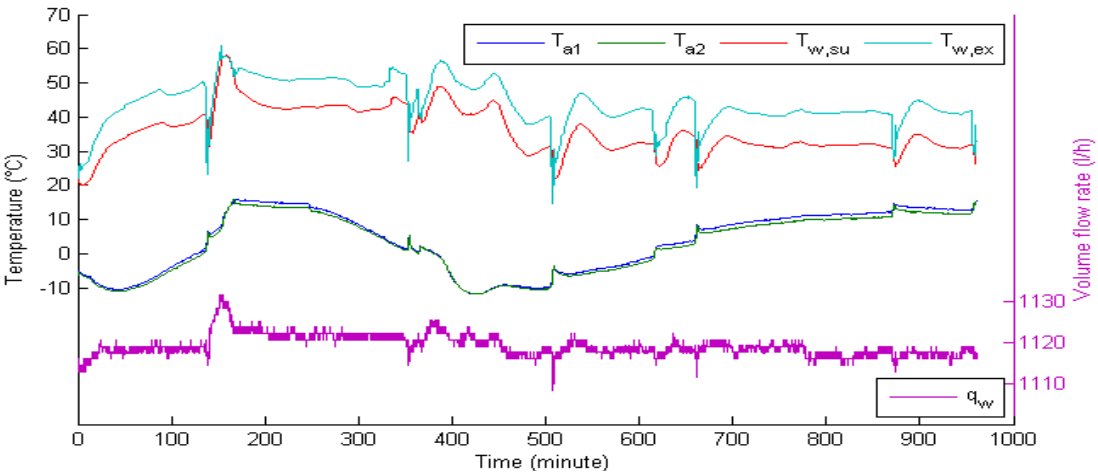

Figure 4. Time evolution of dry temperatures at the exterior room, water temperatures at indoor unit supply/exhaust and water volume flow rate

As shown in Figure 4, the outdoor temperature varies between -10°C and 15°C. The difference between the two sensors is about 1°C. Finally the average value is used. The volume flow rate is maintained constant at about 1120 l/h. The inlet temperature varies between 20°C and 45°C. The outlet temperature varies between 25°C and 60°C.

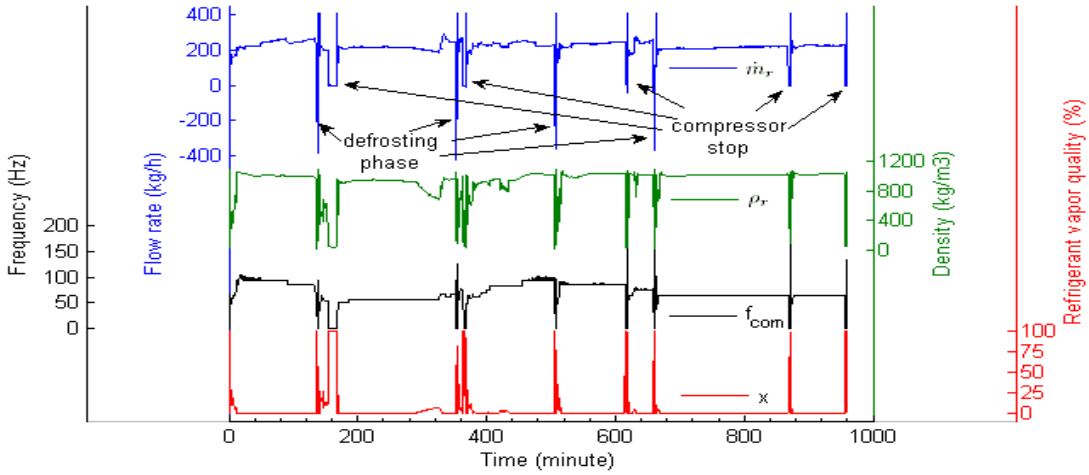

Figure 5. Time evolution of refrigerant mass flow rate at condenser supply, compressor rotation speed, refrigerant density and refrigerant vapor quality at the condenser exhaust

Figure 5 shows the time evolution of the refrigerant mass flow rate at condenser supply, compressor rotation speed, the refrigerant density and refrigerant vapor quality at the condenser exhaust. Periods with null flow rate correspond to compressor stops. ”Negative” flow rates correspond to inversion cycles used to defrost the external evaporator. During defrosting, the refrigerant density varies consequently to the inversion of the cycle. There are 4 defrosting periods in the test. The compressor is always stopped during several minutes after an inversion cycle. Diphasic refrigerant condenser outlet occurs during all defrosting periods and during a short period of time afterwards. This phenomenon can also happen in the heating phase with refrigerant vapor qualities up to 10 %. Diphasic conditions represent about 17 % of the total time period of the test. The average relative difference between heating powers calculated on water side and on refrigerant side is 1.82 %.

4.3 Defrosting Period

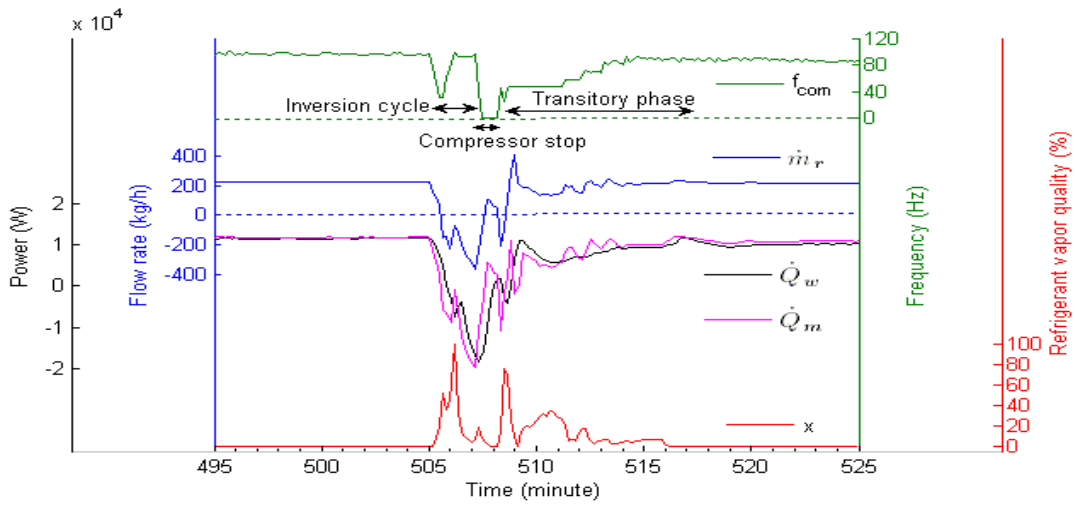

Figure 6. Time evolution of compressor rotation speed, refrigerant flow rate, heating powers on water side and on refrigerant side and refrigerant vapor quality in the defrosting period

This part describes the results obtained between 495th minutes and 525th minutes when a defrosting cycle occurs. Figure 6 shows compressor rotation speed, refrigerant mass flow

rate, heating powers on water side and on refrigerant side and refrigerant vapor quality at the condenser exhaust in the defrosting period. This period can be divided into 3 phases. Firstly, there is an inversion cycle lasting about 2 minutes. It's observed by negative refrigerant flow rate. Secondly, the compressor is stopped during about 1 minute. In this phase the refrigerant flow rate tends to be null. Finally, it's the transitory phase where the compressor restarts and the inversion valve is inverted. This phase lasts about 9 minutes, up to 517th minute when the refrigerant vapor quality returns to zero. It's noted that the inversion of the valve happens a short period of time after the compressor restart. It's proved by the second negative flow rate period. The refrigerant measurement is relatively good. For the defrosting period from 505th minute to 517th minute, the relative difference between heating powers is 1.1 %.

5 DISCUSSION

When the HP is set in the "fixed compressor speed mode", the HP usually stabilizes in a state for which the refrigerant at condenser exhaust is diphasic. This is the case in many steady state tests and the refrigerant vapor quality was observed up to 35%. The situation is different with the "normal mode" where HP controller chooses the compressor speed. The refrigerant is rarely in diphasic state except during start-up and defrosting periods. The reason is always to be clarified, we suppose that HP control is different in these two operation modes.

The refrigerant enthalpy method has been validated in steady state conditions. The difference concerning the average heating power delivered with both internal and external methods was observed to lie between -2.5% and +7.5%. Three causes could explain this difference:

- The oil mass concentration is not measured and is always considered to be 2%
- The uncertainty of the water heating power in test conditions, obtained by using the uncertainties propagation formula, is about 3%.
- The void fraction obtained by Premoli model is uncertain.

When the HP is set in "normal mode", diphasic refrigerant appears at condenser outlet during all defrosting and compressor stop periods and sometimes during heating mode. In the presented dynamic test, diphasic conditions occur about 17 % of the total time period of the test. Therefore, the measurement of the refrigerant vapor quality is necessary to measure accurately the refrigerant heating capacity.

The refrigerant enthalpy method is also validated in dynamic conditions, including defrosting phases. In particular, during the test, the difference concerning the average heating power delivered with both internal and external methods is 1.1% along defrosting phase and 1.8% over the whole duration of the test. The method should give a good accuracy in all other tests if the oil mass concentration is not very far from 2%. However, it is difficult to carry out this method in situ because of the difficulty of the installation of the Coriolis flow meters. Using external ultrasonic flow meters may be a solution for in situ measurement.

The refrigerant measurement method is fully applicable for air-to-air HPs. In addition, the refrigerant vapor quality measurement is probably less required for air to air HPs. Indeed, the experiment showed that diphasic refrigerant condenser outlet occurred essentially during the defrosting period. For an air-to-air HP, the internal fan usually stops during this phase, as shown in the tests of (Teodorese, Detroux et Lebrun 2007). Hence, there is no heat exchange through the condenser during the defrosting period.

6 CONCLUSION

The present study proposes a method to measure the heating power of heat pumps. This method is based on the measurement of the mass flow rate, temperatures and pressures of the refrigerant at the condenser. A measurement of the refrigerant density is used to determine the refrigerant vapor quality at the condenser exhaust. This method was tested on an air-to-water HP and was compared with a water enthalpy method, first, in steady state conditions by setting the HP into the “fixed compressor speed mode”, and then in dynamic conditions by resetting the HP into the “normal mode”.

In the fixed compressor speed mode, the refrigerant at the condenser exhaust can be permanently in diphasic state. In the normal mode, the phenomenon of diphasic refrigerant at the condenser exhaust is observed mainly during the defrosting phase with only occasional short periods during the standard heating periods.

The refrigerant enthalpy method is validated in steady state conditions. With the refrigerant vapor quality ranging from 0 % to 35 %, the relative difference between the two measurement methods were observed to lie between -2.5% and +7.5%. For tests with refrigerant vapor quality at condenser exhaust of zero (liquid state), the measurement differences range between -0.2 % and +0.8 %.

The refrigerant enthalpy method is also accurate in dynamic conditions (including for defrosting phases). On a long duration test, the relative difference with the water enthalpy method has been measured to be of 1.8% in average. It is worth noting that while performing the experiments, the periods of time with a diphasic state condition at the condenser outlet were observed with a not negligible frequency (17%).

The drawback of the refrigerant method for in situ measurements is the difficulty of the installation of Coriolis flow meters. In further study, the internal method will be used as a reference to check the air enthalpy methods proposed for in situ measurement of the HSPF of air-to-air HP.

Nomenclature

Cg	oil mass concentration	
c_p	heat capacity	J/(kg.K)
D	tube diameter	mm
f	rotation speed	Hz
G	mass flux	kg/(m^2.s)
h	enthalpy	J
$\dot{m}$	mass flow rate	kg/s
P	electric power	W
p	pressure	bar
q	volume flow rate	m^3/s
$\dot{Q}$	power	W
T	temperature	°C
x	refrigerant quantity	
α	void fraction	
σ	surface tension	N/m
μ	dynamic viscosity	kg/(m.s)
ρ	density	kg/m^3
ε	relative difference	

Subscrips

a	air
com	compressor
con	condenser
ex	exhaust side
liq	saturated liquid
m	refrigerant-oil mixture
oil	oil
r	refrigerant
su	supply side
vap	saturated vapor
w	water

Abbreviations

HP	heat pump
HSPF	heat seasonal performance factor
POE	polyol-ester

References

Baroczy, C. J. «Correlation of liquid fraction in two-phase flow with application to liquid metals.» *Chem. Eng. Prog. 61*, 1965: 179–191.

Conde, M.R. «Estimation of thermophysical properties of lubricating oils and their solutions with refrigerants: an appraisal of existing methods.» *Appl.Therm.Eng.*, 1996: Vol.16, 51-61.

EN-14511. «Air conditioners, liquid chilling packages and heat pumps with electrically driven compressors for space heating and cooling - Part 2: Test conditions.» 2008.

Hughmark, G. A. «Holdup in gas-liquid flow.» *Chem. Eng. Prog. 58*, 1962: 62-65.

Ichikawa, T., W. Anna, et Y. Satoshi. «Study on Running Performance of a Split-type Air conditioning System Installed on a University Campus in Subruban Tokyo.» *Climat 2007 WellBeing Indoors.* 2007.

Liley, P.E, et W.R. Gambill. «Physical and chemical data.» Dans *Chemical Engineering Handbook, 5th edition*, 226-250. New York: McGraw-Hill, 1973.

LNE. *Guide d'utilisation des capteurs de température de surface. Projet AQCEN, Ministère de l'Economie des Finances et de l'Industrie.* Laboratoire national de métrologie et d'essais, 2004.

Ma, Xiaokui, Guoliang Ding, Ping Zhang, Weizhe Han, Shinichi Kasahara, et Takahiro Yamaguchi. «Experimental validation of void fraction models for R410A air conditioners.» *International journal of refrigeration 32*, 2009: 780-790.

NIST. «Reference Fluid Thermodynamic and Transport Properties Database-Version 8.0.» 2009.

Fahlén, Per. *Methods for commissionning and performance checking of heat pumps and refrigeration equipment.* Gothenburg: Chalmers University of Technology, 2004.

Premoli, A., D. D. Francesco, et A. Prina. «A dimensional correlation for evaluating two-phase mixture density.» *La Termotecnica 25*, 1971: 17-26.

Rice, C.K. «The effect of void fraction correlation and heat flux assumption on refrigerant charge inventory predictions.» *ASHRAE Transactions*, 1987: Vol.93, Pt.1, No.3035, pp.341-367.

Riviere, P., M. Coevoet, C. T. Tran, et R. Nordman. «SEPEMO (Heat Pump Seasonal Performance Monitoring) Project, D4.1. guideline for air to air heat pump field measurements. Contract for the European Communities. Contract No.: IEE/08/776/SI2.529222.» 2010.

Tandon, T. N., H. K. Varma, et C. P. Gupta. «A void fraction model for annular two-phase flow.» *Int. J. Heat Mass Transf. 28*, 1985: 191–198.

Teodorese, Vladut, Laurie Detroux, et Jean Lebrun. *Testing of a room air conditioner - High class RAC test results-Medium class RAC test results.* Liège: Université de Liège, 2007.

Woldesemayat, Melkamu A., et Afshin J. Ghajar. «Comparison of void fraction correlations for different flow patterns in horizontal and upward inclined pipes.» *International Journal of Multiphase Flow 33*, 2007: 347–370.

Youbi-Idrissi, M., J. Bonjour, M.F. Terrier, F. Meunier, et C. Marvillet. «In-situ measurements of enthalpy change on an evaporator working with r407c: effect of oil presence.» *Eurotherm 72th.* Valence, 2003. 104-109.

Zehnder, Michele. *Efficient air-water heat pumps for high temperature lift residential heating including oil migration aspects. PhD thesis.* Lausanne: Ecole Polytechnique Fédérale de Lausanne, 2004.